HONDA
POWER PRODUCTS

GENERAL PURPOSE ENGINE

GX390U1
GX390R1
GX390U2
GX390R2

PARTS CATALOGUE

5

14Z5R605

© Honda Motor Co., Ltd. 2010

FOREWORD INDEX 1

ENGINE GROUP 2

PART NUMBER INDEX 3

PART NAME INDEX 4

Instruction for use of parts catalogue

- **This parts catalogue was prepared based on the latest information available as of October 01, 2010.**
  - See the parts catalogue news for any revision that is made after October 01, 2010.
- **Always specify the part number when ordering a part.**
  - Check the model, type, serial numbers, color, maker, and the size as needed before ordering a part.
  - Note that the illustrations (part drawings) can differ from the actual parts in shape.
    They are given just to help you to refer to the parts.
- **When modifications or additions to this parts catalogue are made, a revised edition will be issued at an appropriate time, with successively progressing revision numbers on the cover. We recommend obtaining such revisions in order to keep your parts catalogue up-to-date at all times. To check whether a parts catalogue revision has been issued, please contact your Honda distributor.**

Initial version issue date April 13, 2005
Honda Motor Co., Ltd.

CONTENTS

	Page	Address No.	
Instruction for use of parts catalogue	1	B 1	1
How to refer to the part information	2	B 2	
Part catalogue structure	3	B 3	
When the parts were revised	4	B 4	
Abbreviations used in the parts catalogue	4	B 4	
How to check the part block and serial numbers	5	B 5	
Models, parts catalogue codes and applicable serial numbers	6	B 6	
Features of each type	12	B12	
Fuel hose, general purpose hoses and vinyl hose	28	C12	
Illustrated index	29	C13	
ENGINE GROUP	34	E 1	2
PART NO. INDEX	165	N 1	3
PART NAME INDEX	170	2-B 1	4

How to refer to the part information

Ⓐ Reference with “Illustrated index”

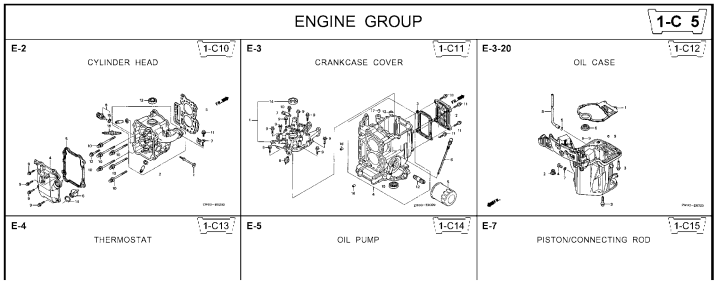

Ⓑ Reference with “Part number index”

PART NO. INDEX

Part Number	Address	Page	Ref.
06000			
06316-ZW9-000	1-G9	88	1
11000			
11300-ZW9-405	1-C11	27	1
11300-ZW9-406	1-C11	27	1
11340-ZW9-000	1-C11	27	2
11342-ZW9-000	1-C11	27	3
11381-ZW9-003	1-C12	28	1
12000			
12000-ZW9-405ZA	1-C11	27	4
12155-ZV4-A00	1-C13	29	1
12166-ZW9-000	1-C10	26	1
12209-GB4-681	1-C16	32	1
12210-ZW9-405ZA	1-C10	26	2
12216-ZE2-300	1-E8	55	1
	1-E11	58	1
15212-ZW9-000	1-C14	30	
15220-ZW9-003	1-C14	30	
15332-ZW9-000	1-E8	55	
15332-ZW9-A30	1-E11	58	
15400-PFB-004	1-C11	27	
15422-ZW9-000	1-C14	30	
15473-881-000	1-C14	30	
15474-ZW9-000	1-C14	30	
15611-921-000	1-C10	26	
15655-ZW9-000	1-C11	27	
16000			
16010-ZV4-005	1-D4	36	
16011-ZV4-005	1-D4	36	
16013-ZW9-003	1-D4	36	
16016-ZW9-003	1-D4	36	
16016-ZW9-721	1-D4	36	
16023-ZW9-003	1-D4	36	
16024-ZV4-650	1-D4	36	
16028-ZV4-650	1-D4	36	

Ⓒ Reference with “Part name index”

PART NAME INDEX

Part name	Address	Page	Ref.	
[A]				BOLT ,
ABSORBER ,FUEL	1-E15	62	5	
ARMATURE COMP.	1-D11	43	7	BOLT ,
ARM COMP. ,LINK JOINT	1-G6	85	18	BOLT ,
ARM COMP. ,SHIFT LINK	1-G6	85	14	BOLT ,
ARM COMP. ,TILT	1-F15	79	20	
ARM ,FUEL PUMP ROCKER	1-C16	32	4	
ARM ,REVERSE LOCK	1-F15	79	18	
ARM ,SHIFT LINK	1-F11	74	7	
ARM ,STOPPER	1-D1	33	12	BOLT ,
ARM ,THROTTLE REMOTE	1-F11	74	6	
ARM ,VALVE ROCKER	1-C16	32	3	
[B]				
BAG ,TOOL ,160MM	1-G5	84	10	
BAND	1-G6	86	37	
BAND B1,WIRE	1-F6	69	1	
BAND ,CORD	1-F3	67	18	BOLT ,
BAND ,TUBE CLIP ,11MM	1-E15	63	20	
BAND ,TUBE CLIP ,12.5MM	1-E15	63	19	BOLT ,

Address No.

E-2 CYLINDER HEAD 1-C10

Block No.

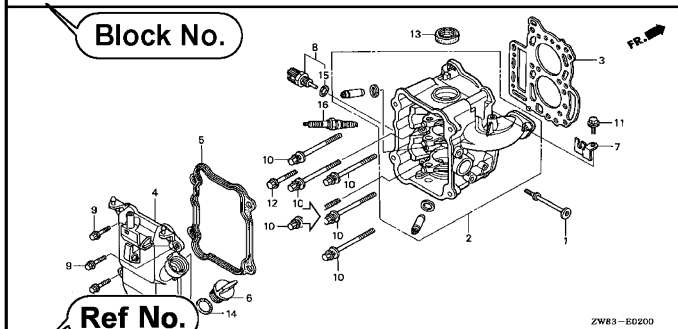

Ref No.

Service item	F.R.T.
O-RING, 26X2.7	0.1
.PLUG, SPARK	
O-RING, 9.5X1.5	0.2
.SENSOR ASSY., WATER TEMPERATURE	
COVER COMP., HEAD	0.3
.PACKING, HEAD COVER	
GASKET, CYLINDER HEAD	1.8
OIL SEAL, 20X32X6	2.4
HEAD COMP., CYLINDER	3.1

Ref. No.	Part No.	Description	BF 9.9D1	BFP 9.9D1	BF 10D1	BFP 10D1	BF 10B1	BFP 10B1	Serial No.	Parts catalogue code
1	12166-ZW9-000	STOPPER, ENGINE SIDE	2	2	2	2	2	2		
2	12210-ZW9-000ZA	HEAD COMP., CYLINDER *NH8*.....DARK GRAY	1	1	1	1	1	1		
3	12251-ZW9-003	GASKET, CYLINDER HEAD	1	1	1	1	1	1		
4	12310-ZW9-000	COVER COMP., HEAD	1	1	1	1	1	1		
5	12312-ZW9-000	PACKING, HEAD COVER	1	1	1	1	1	1		
6	15611-921-000	CAP, OIL (NO GAUGE)	1	1	1	1	1	1		
7	16617-ZW9-000	HOLDER, CABLE	1	1	1	1	1	1	-------- --------	SC,SG
	16617-ZW9-010		1	1	1	1	1	1	-------- 1001800	LHC,LHD
			1	1	1	1	1	1	1001801 --------	LHC,LHD
8	35673-ZW5-003	SENSOR ASSY., WATER TEMPERATURE	1	1	1	1	1	1		
9	90003-ZW9-000	BOLT, FLANGE, 6X22	4	4	4	4	4	4		
10	90007-ZW9-003	BOLT, FLANGE, 8X83	6	6	6	6	6	6		
11	90011-ZW9-000	BOLT, FLANGE, 6X14(CT200)	1	1	1	1	1	1		
12	90020-ZW9-000	BOLT, FLANGE, 8X40	2	2	2	2	2	2		
13	91202-KJ9-003	OIL SEAL, 20X32X6	1	1	1	1	1	1		
14	91301-805-000	O-RING, 26X2.7	1	1	1	1	1	1		
15	91307-PK2-005	O-RING, 9.5X1.5(HONDA KIKAKI)	1	1	1	1	1	1		
16	98059-55916	PLUG, SPARK (CR5EH-9)	2	2	2	2	2	2		
	98059-55926	PLUG, SPARK (U16FER9)	2	2	2	2	2	2		

44

2000.09.20 E

Page No.

Part catalogue structure

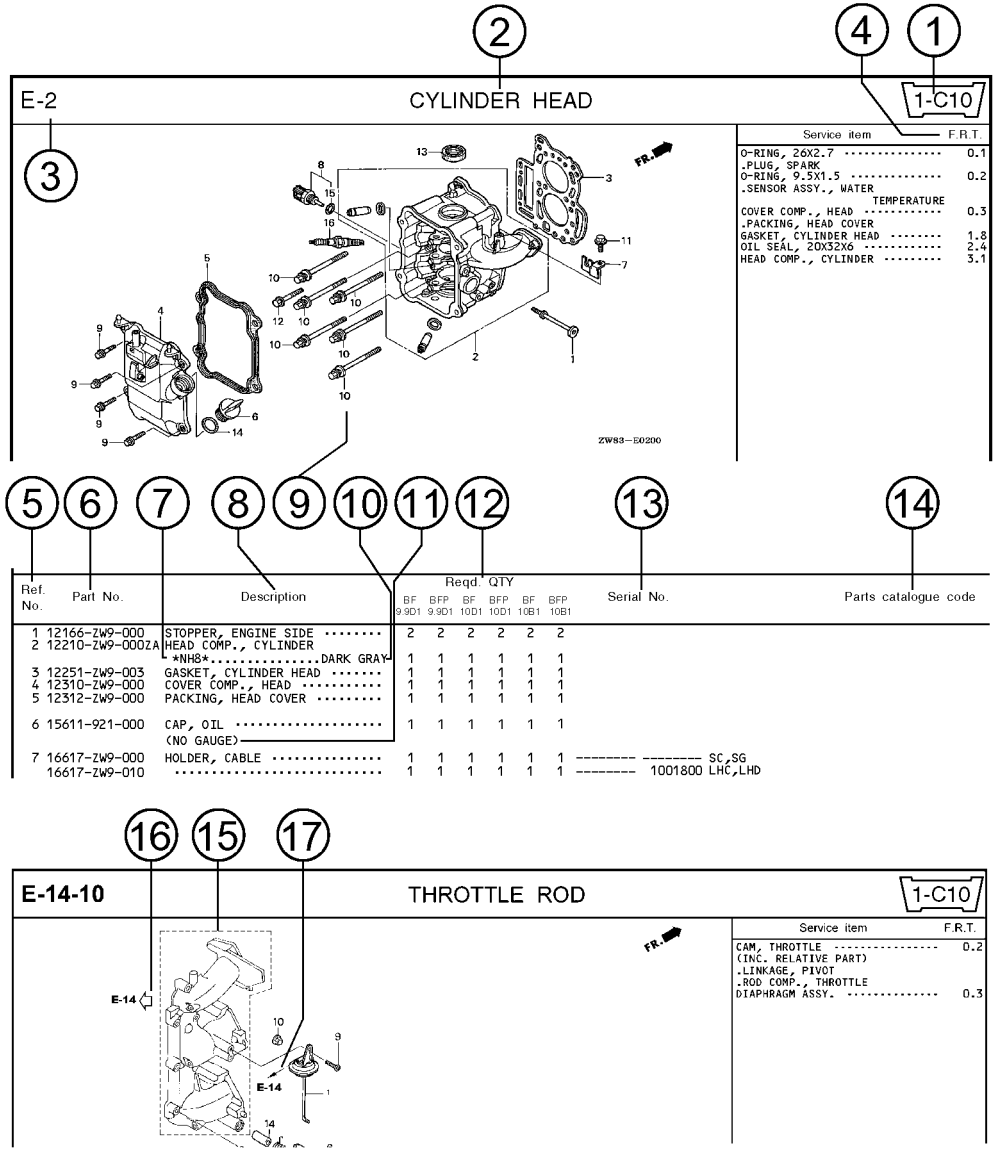

① Address number
- Address No. is provided (in place of the page No.) to help you refer to the part with the part No. or part name.

② Block title ③ Block number

④ Service item/Flat rate time

⑤ Reference number
- Title number marked with the parenthesis or parentheses indicates that it continues from the previous page.

⑥ Part number ⑦ Honda color code

⑧ Description

⑨ Assemblies
- Sections framed with broken lines in the exploded view drawings are available as complete assemblies. (Their individual parts can also be obtained.)

⑩ Color description

⑪ Note
- Notes are shown with the parentheses in the part name column.

⑫ Required quantity
- Required QTY shown in the parenthesis or parentheses indicates the optional part.
- Required QTY marked with “N” Indicates the optional part that should be selected as needed.
- Required QTY indicates the number of the part used in the block.

⑬ Serial number

⑭ Type
- When the type column is blank, it indicates that the part is applicable to all types.
- As the type of the actual unit may differ from the “parts catalogue, type” please refer to “Models, types and applicable serial numbers” for confirmation.

⑮
- Parts enclosed within a dotted line ⬚ are covered in a different block.

⑯ ⇦
- A hollow arrow ⇦ indicates the block No. for the parts enclosed within a dotted line ⬚ .

⑰ ←
- A solid arrow ← indicates the block No. the part in question is connected to.

When the parts were revised

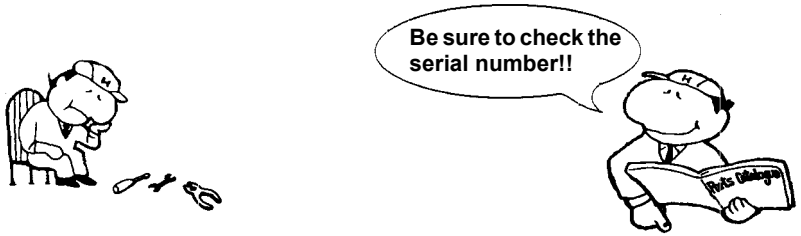

Ref. No.	Part No.	Description	Reqd. QTY BF 9.9D1	BFP 9.9D1	BF 10D1	BFP 10D1	BF 10B1	BFP 10B1	Serial No.
1	12166-ZW9-000	STOPPER, ENGINE SIDE	2	2	2	2	2	2	
2	12210-ZW9-000ZA	HEAD COMP., CYLINDER							
		NH8.....DARK GRAY	1	1	1	1	1	1	
3	12251-ZW9-003	GASKET, CYLINDER HEAD	1	1	1	1	1	1	
4	12310-ZW9-000	COVER COMP., HEAD	1	1	1	1	1	1	
5	12312-ZW9-000	PACKING, HEAD COVER	1	1	1	1	1	1	
6	15611-921-000	CAP, OIL (NO GAUGE)	1	1	1	1	1	1	
7	16617-ZW9-000	HOLDER, CABLE (###)	1	1	1	1	1	1	-------- -------- SC,SG
	16617-ZW9-010		1	1	1	1	1	1	-------- 1001800 LHC,LHD
			1	1	1	1	1	1	1001801 -------- LHC,LHD

The number has been used from the initial model without revision.

When shown at the left side, it is applicable to the models of No.1001801 and the subsequent numbers.

When shown at the right side, it is applicable to the models up to No.1001800.

- The parts listed with "###" at the end of the parts name have limited supply period (parts not for sale).

Abbreviations used in the parts catalogue

- **The following abbreviations are used in the parts name column.**

A ..... Ampere
A.C. ..... Alternating current
ASSY. .... Assembly
AT. ..... Automatic transmission
C.D.I. ..... Capacitive discharge ignition
COMP. ... Complete
D.C. ..... Direct current
EX. ..... Exhaust
G.F.C.I ... Ground fault circuit interruptor
HEX. ..... Hexagonal
H.S.T. .... Hydrostatic transmission
FR. .....Front
IN. .....Inlet
L (100L) .Link (100 Links)
L. .....Left
MM .....Millimeter
MT. .....Manual Transmission
P.T.O. .....Power take off
R. .....Right
RR. .....Rear
STD. .....Standard
T (22T) ...Tooth (22 Teeth)
V .....Volt
W .....Watt

How to check the part block and serial numbers

Part block	Engine parts E-2~	Carburetor parts E-14~
Numbers needed	Stamped engine number	Stamped carburetor identification number
Check point	①	②

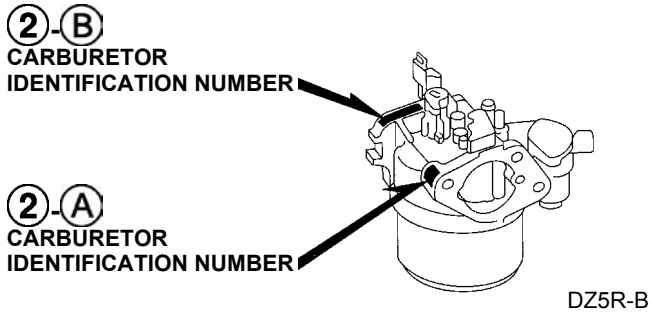

DZ5R-B

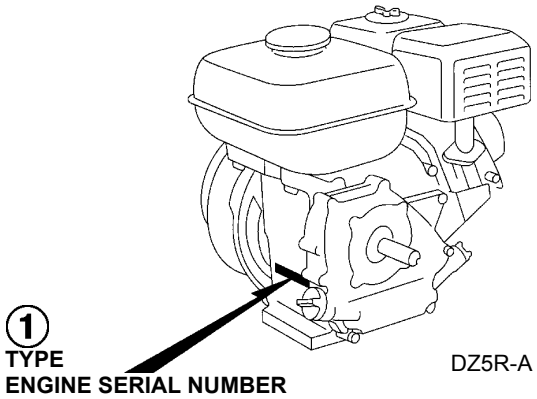

DZ5R-A

Models, parts catalogue codes and applicable serial numbers

- **Models, parts catalogue codes and applicable serial Nos. given in this parts catalogue can be identified as follows.**

Model	Type	Parts catalogue type	Applicable engine serial No.	Applicable carburetor identification No.
GX390U1	ED6	ED6	GCANK-1000001~	BE87A B / C BE89C A / B
	EDD2	EDD2		
	EDS2	EDS2		BE87G A BE89B A
	EDS6	EDS6		
	EDT6	EDT6		
	EN6	EN6		BE87A B / C BE89C A / B
	ENT2	ENT2		
	HA2	HA2		BE85B B
	HJA2	HJA2		
	LKE	LKE		
	LX2	LX2		
	LXE2	LXE2		
	LXE4	LXE4		
	LXE8	LXE8		
	LXQ4	LXQ4		
	LXU	LXU		
	PA2	PA2		

Model	Type	Parts catalogue type	Applicable engine serial No.	Applicable carburetor identification No.
GX390U1	PAE2	PAE2	GCANK-1000001~	BE85B B
	PXE8	PXE8		
	PXU	PXU		
	QA2	QA2		
	QA26	QA26		
	QAA2	QAA2		
	QAE2	QAE2		
	QAE6	QAE6		
	QAW	QAW		
	QC2	QC2		BE85C B
	QDW9	QDW9		
	QE	QE		BE85B B
	QHB4	QHB4		
	QK4	QK4		
	QKA4	QKA4		
	QKB2	QKB2		
	QME0	QME0		

Model	Type	Parts catalogue type	Applicable engine serial No.	Applicable carburetor identification No.
GX390U1	QNB2	QNB2	GCANK-1000001~	BE85B B
	QND	QND		
	QNE2	QNE2		
	QNE6	QNE6		
	QNE8	QNE8		
	QNE9	QNE9		BE85A B
	QNK	QNK		BE85B B
	QNR2	QNR2		
	QNR6	QNR6		
	QSC2	QSC2		BE85C B
	QTR2	QTR2		BE85B B
	QWA2	QWA2		
	QWA4	QWA4		BE85C B
	QWC4	QWC4		
	QWH2	QWH2		
	QWT2	QWT2		
	QXB	QXB		BE85B B
	QXB7	QXB7		
	QXB9	QXB9		

Model	Type	Parts catalogue type	Applicable engine serial No.	Applicable carburetor identification No.
GX390U1	QXC4	QXC4	GCANK-1000001~	BE49A C
	QXC6	QXC6		BE85C B
	QXC9	QXC9		
	QXE4	QXE4		BE85B B
	QXE6	QXE6		
	QXE7	QXE7		
	QXE8	QXE8		
	QXE9	QXE9		
	QXEB	QXEB		
	QXH9	QXH9		
	QXQ4	QXQ4		
	QXQ7	QXQ7		
	QXS4	QXS4		BE85C B
	QXU	QXU		BE85B B
	SCK4	SCK4		
	SHQ4	SHQ4		
	SM32	SM32		
	SMC1	SMC1		
	SMD3	SMD3		BE85R A / B

Model	Type	Parts catalogue type	Applicable engine serial No.	Applicable carburetor identification No.
GX390U1	SME0	SME0	GCANK-1000001~	BE85B B
	SME6	SME6		
	SMX2	SMX2		
	SNC	SNC		BE49A C
	STC4	STC4		BE85B B
	SWA4	SWA4		
	SXB	SXB		
	SXB7	SXB7		
	SXB9	SXB9		
	SXE4	SXE4		
	SXE7	SXE7		
	SXE8	SXE8		
	SXE9	SXE9		
	SXEB	SXEB		
	SXQ4	SXQ4		
	SXU	SXU		
	VA2	VA2		BE85J A / B
	VAA1	VAA1		BE87D C BE87M B BE89D A
	VAA8	VAA8		

Model	Type	Parts catalogue type	Applicable engine serial No.	Applicable carburetor identification No.
GX390U1	VAC2	VAC2	GCANK-1000001~	BE85J A / B
	VAG2	VAG2		
	VC2	VC2		BE87F B BE89F B
	VC2N	VC2N		BE89F B
	VCN2	VCN2		BE85J A / B
	VD2	VD2		
	VDB2	VDB2		
	VDE2	VDE2		
	VE39	VE39		BE87F B BE89F B
	VEP7	VEP7		BE85J A / B
	VEP9	VEP9		BE89C A / B
	VK2	VK2		BE85J A / B
	VKB2	VKB2		
	VKE4	VKE4		BE87E C BE89E A / B
	VKE9	VKE9		
	VKX4	VKX4		
	VKX9	VKX9		
	VM2	VM2		BE85J A / B
	VMA2	VMA2		

Model	Type	Parts catalogue type	Applicable engine serial No.	Applicable carburetor identification No.
GX390U1	VME2	VME2	GCANK-1000001~	BE85J A / B
	VMS2	VMS2		BE87A B / C BE89C A / B
	VN17	VN17		BE85J A / B
	VN27	VN27		
	VNG1	VNG1		
	VNG2	VNG2		
	VNS9	VNS9		
	VPE4	VPE4		BE87F B BE89F B
	VPE5	VPE5		
	VPE7	VPE7		
	VPE9	VPE9		
	VPX4	VPX4		
	VPX5	VPX5		
	VPX7	VPX7		
	VPX9	VPX9		
	VS39	VS39		
	VS49	VS49		BE87E C BE89E A / B
	VSD	VSD		BE85J A / B
	VSD4	VSD4		BE87E C BE89E A / B

Model	Type	Parts catalogue type	Applicable engine serial No.	Applicable carburetor identification No.
GX390U1	VSD7	VSD7	GCANK-1000001~	BE85J A / B
	VSD9	VSD9		
	VTH4	VTH4		BE87M B BE89D A
	VWA2	VWA2		BE85J A / B
	VWC	VWC		BE87A B / C BE89C A / B
	VWC7	VWC7		BE85J A / B
	VWC9	VWC9		
	VWE	VWE		BE87A B / C BE89C A / B
	VWS	VWS		BE89C A / B
	VWT4	VWT4		BE85R A / B
	VX39	VX39		BE87F B BE89F B
	VX8	VX8		BE85J A / B
	VXB	VXB		
	VXB7	VXB7		
	VXB9	VXB9		
	VXE2	VXE2		
	VXE4	VXE4		
	VXE6	VXE6		
	VXE7	VXE7		

Model	Type	Parts catalogue type	Applicable engine serial No.	Applicable carburetor identification No.
GX390U1	VXE8	VXE8	GCANK-1000001~	BE85J A / B
	VXE9	VXE9		
	VXEB	VXEB		
	VXG	VXG		BE87F B BE89F B
	VXG2	VXG2		
	VXP7	VXP7		BE85J A / B
	VXQ4	VXQ4		
	PXU4	PXU4		BE85B B
	SM34	SM34		
	SMX4	SMX4		
GX390R1	ED6	ED6		BE89C B
	EDD2	EDD2		
	EDS2	EDS2		BE89B A
	EDS6	EDS6		
	EDT6	EDT6		
	EN6	EN6		BE89C B
	ENT2	ENT2		
	PXM8	PXM8		BE85B B
	QKB2	QKB2		

Model	Type	Parts catalogue type	Applicable engine serial No.	Applicable carburetor identification No.
GX390R1	QNB2	QNB2	GCANK-1000001~	BE85B B
	QWA2	QWA2		
	VAA1	VAA1		BE89D A
	VAA8	VAA8		
	VAC2	VAC2		BE85J A / B
	VAG2	VAG2		
	VC2	VC2		BE89F B
	VCN2	VCN2		BE85J A / B
	VD2	VD2		
	VDB2	VDB2		
	VDE2	VDE2		
	VEP9	VEP9		BE89C B
	VK2	VK2		BE85J A / B
	VKB2	VKB2		
	VKE4	VKE4		BE89E B
	VKX4	VKX4		
	VN17	VN17		BE85J A / B
	VNG1	VNG1		
	VNS9	VNS9		

Model	Type	Parts catalogue type	Applicable engine serial No.	Applicable carburetor identification No.
GX390R1	VPE4	VPE4	GCANK-1000001~	BE89F B
	VPE5	VPE5		
	VPE7	VPE7		
	VPE9	VPE9		
	VPX4	VPX4		
	VPX5	VPX5		
	VPX7	VPX7		
	VPX9	VPX9		
	VS39	VS39		
	VS49	VS49		BE89E B
	VSD4	VSD4		
	VTH4	VTH4		BE89D A
	VWC	VWC		BE89C B
	VWC7	VWC7		BE85J A / B
	VWC9	VWC9		
	VWE	VWE		BE89C B
	VWS	VWS		
	VWT4	VWT4		BE85R A / B
	VXG	VXG		BE89F B

Model	Type	Parts catalogue type	Applicable engine serial No.	Applicable carburetor identification No.
GX390U2	PXE8	PXE8	GCBHK-1000001~	BE88B A
	PXU	PXU		
	PXU4	PXU4		
	QXE8	QXE8		
	QXU	QXU		
	SM32	SM32		
	SM34	SM34		
	SMX2	SMX2		
	SXE4	SXE4		
GX390R2	ED6	ED6		BE89C B
	EDD2	EDD2		
	EDS6	EDS6		
	EDT6	EDT6		
	EN6	EN6		BE89C B
	ENT2	ENT2		
	PXM8	PXM8		BE88B A
	VWS	VWS		BE89C B

* Of carburetor identification numbers, only the portions underlined in the example below are used for registration.

BE 87A B KC ナ
Ⓐ Ⓑ

Features of each type

- **See the following table for the features of each type. (Items in brackets are optional)**

Specifications	Model / Type	GX390U1													
		ED6	EDD2	EDS2	EDS6	EDT6	EN6	ENT2	HA2	HJA2	LKE	LX2	LXE2	LXE4	LXE8
Crankshaft	5/16" Tapered														
	35mm Ø Tapered	●	●	●	●	●	●	●							
	25mm Ø Straight														
	25.4mm Ø Straight														
	20mm Ø Spline								●	●					
	25.4mm Ø Spline														
	30mm Ø Spline										●	●	●	●	●
Air cleaner	Silent								●	●	●	●	●	●	●
	Cyclone														
	Generator	●	●	●	●	●	●	●							
Muffler	Silent								●	●	●	●	●	●	●
	Standard														
	Generator	●	●	●	●	●	●	●							
Coil	Lamp coil	●	●				●	●							
	Charge coil		●	●	●			●		●	●		●	●	●
Oil alert		●	●	●	●	●	●	●	●	●	●	●	●	●	●
Starter motor			●	●	●			●			●		●	●	●
Reduction									●	●	●	●	●	●	●

Specifications	Model / Type	GX390U1													
		LXQ4	LXU	PA2	PAE2	PXE8	PXU	QA2	QA26	QAA2	QAE2	QAE6	QAW	QC2	QDW9
Crankshaft	5/16" Tapered														
	35mm Ø Tapered														
	25mm Ø Straight														
	25.4mm Ø Straight							●	●	●	●	●	●	●	●
	20mm Ø Spline														
	25.4mm Ø Spline			●	●	●	●								
	30mm Ø Spline	●	●												
Air cleaner	Silent	●	●	●	●	●	●	●	●	●	●	●	●		
	Cyclone													●	●
	Generator														
Muffler	Silent	●	●	●	●	●	●	●	●	●	●	●	●	●	●
	Standard														
	Generator														
Coil	Lamp coil														
	Charge coil				●	●					●	●		●	
Oil alert		●	●	●	●	●	●	●	●	●	●	●	●	●	●
Starter motor					●	●					●	●		●	
Reduction		●	●												

Specifications	Model / Type	GX390U1													
		QE	QHB4	QK4	QKA4	QKB2	QME0	QNB2	QND	QNE2	QNE6	QNE8	QNE9	QNK	QNR2
Crankshaft	5/16" Tapered														
	35mm Ø Tapered														
	25mm Ø Straight														
	25.4mm Ø Straight	●	●	●	●	●	●	●	●	●	●	●	●	●	●
	20mm Ø Spline														
	25.4mm Ø Spline														
	30mm Ø Spline														
Air cleaner	Silent	●	●	●	●	●	●	●	●	●	●	●	●	●	●
	Cyclone														
	Generator														
Muffler	Silent	●	●	●	●	●	●	●	●	●	●	●	●	●	●
	Standard														
	Generator														
Coil	Lamp coil														
	Charge coil				●	●	●	●	●	●	●	●	●	●	●
Oil alert				●	●	●	●	●	●	●	●	●	●		●
Starter motor					●	●	●	●	●	●	●	●	●	●	●
Reduction															

Specifications	Model / Type	GX390U1													
		QNR6	QSC2	QTR2	QWA2	QWA4	QWC4	QWH2	QWT2	QXB	QXB7	QXB9	QXC4	QXC6	QXC9
Crankshaft	5/16" Tapered										●	●			
	35mm Ø Tapered														
	25mm Ø Straight														
	25.4mm Ø Straight	●	●	●	●	●	●	●	●	●			●	●	●
	20mm Ø Spline														
	25.4mm Ø Spline														
	30mm Ø Spline														
Air cleaner	Silent	●		●	●					●	●	●			
	Cyclone		●			●	●	●	●				●	●	●
	Generator														
Muffler	Silent	●	●	●	●	●	●	●	●	●	●	●		●	●
	Standard												●		
	Generator														
Coil	Lamp coil														
	Charge coil	●	●	●	●		●	●							
Oil alert		●	●	●	●	●	●	●	●	●	●	●	●	●	●
Starter motor		●	●	●				●							
Reduction															

Specifications	Model / Type	GX390U1													
		QXE4	QXE6	QXE7	QXE8	QXE9	QXEB	QXH9	QXQ4	QXQ7	QXS4	QXU	SCK4	SHQ4	SM32
Crankshaft	5/16" Tapered			●		●		●		●					
	35mm Ø Tapered														
	25mm Ø Straight												●	●	●
	25.4mm Ø Straight	●	●		●		●		●		●	●			
	20mm Ø Spline														
	25.4mm Ø Spline														
	30mm Ø Spline														
Air cleaner	Silent	●	●	●	●	●	●	●	●	●		●	●	●	●
	Cyclone										●				
	Generator														
Muffler	Silent	●	●	●	●	●	●	●	●	●		●	●	●	●
	Standard										●				
	Generator														
Coil	Lamp coil														
	Charge coil	●	●	●	●	●	●	●					●		●
Oil alert		●	●	●	●	●	●	●	●	●	●	●	●		●
Starter motor		●	●	●	●	●	●	●					●		●
Reduction															

Specifications	Model / Type	GX390U1													
		SMC1	SMD3	SME0	SME6	SMX2	SNC	STC4	SWA4	SXB	SXB7	SXB9	SXE4	SXE7	SXE8
Crankshaft	5/16" Tapered										●	●		●	
	35mm Ø Tapered														
	25mm Ø Straight	●	●	●	●	●	●	●	●	●			●		●
	25.4mm Ø Straight														
	20mm Ø Spline														
	25.4mm Ø Spline														
	30mm Ø Spline														
Air cleaner	Silent	●	●	●	●	●		●	●	●	●	●	●	●	●
	Cyclone						●								
	Generator														
Muffler	Silent	●		●	●	●		●	●	●	●	●	●	●	●
	Standard		●				●								
	Generator														
Coil	Lamp coil	●													
	Charge coil			●	●			●					●	●	●
Oil alert			●	●	●	●	●	●	●	●	●	●	●	●	●
Starter motor				●				●					●	●	●
Reduction															

Specifications	Model / Type	GX390U1													
		SXE9	SXEB	SXQ4	SXU	VA2	VAA1	VAA8	VAC2	VAG2	VC2	VC2N	VCN2	VD2	VDB2
Crankshaft	5/16" Tapered	●				●	●	●	●	●	●	●	●	●	●
	35mm Ø Tapered														
	25mm Ø Straight		●	●	●										
	25.4mm Ø Straight														
	20mm Ø Spline														
	25.4mm Ø Spline														
	30mm Ø Spline														
Air cleaner	Silent	●	●	●	●	●			●	●			●	●	●
	Cyclone														
	Generator						●	●			●	●			
Muffler	Silent	●	●	●	●	●			●	●			●	●	●
	Standard														
	Generator						●	●							
Coil	Lamp coil														
	Charge coil	●	●					●			●	●	●		●
Oil alert		●	●	●	●	●	●	●	●	●	●	●	●	●	●
Starter motor		●	●					●			●	●	●		●
Reduction															

Specifications	Model / Type	GX390U1													
		VDE2	VE39	VEP7	VEP9	VK2	VKB2	VKE4	VKE9	VKX4	VKX9	VM2	VMA2	VME2	VMS2
Crankshaft	5/16" Tapered	●	●	●	●	●	●	●	●	●	●	●	●	●	●
	35mm Ø Tapered														
	25mm Ø Straight														
	25.4mm Ø Straight														
	20mm Ø Spline														
	25.4mm Ø Spline														
	30mm Ø Spline														
Air cleaner	Silent	●		●		●	●					●	●	●	
	Cyclone														
	Generator		●		●			●	●	●	●				●
Muffler	Silent	●				●	●					●	●	●	
	Standard														
	Generator		●					●	●	●	●				
Coil	Lamp coil											●	●	●	●
	Charge coil	●	●	●	●	●	●	●	●					●	●
Oil alert		●	●	●	●	●	●	●	●	●	●	●	●	●	●
Starter motor		●	●	●		●	●	●	●					●	●
Reduction															

Specifications	Model / Type	GX390U1													
		VN17	VN27	VNG1	VNG2	VNS9	VPE4	VPE5	VPE7	VPE9	VPX4	VPX5	VPX7	VPX9	VS39
Crankshaft	5/16" Tapered	●	●	●	●	●	●	●	●	●	●	●	●	●	●
	35mm Ø Tapered														
	25mm Ø Straight														
	25.4mm Ø Straight														
	20mm Ø Spline														
	25.4mm Ø Spline														
	30mm Ø Spline														
Air cleaner	Silent	●	●	●	●	●									
	Cyclone														
	Generator						●	●	●	●	●	●	●	●	●
Muffler	Silent	●	●	●	●	●	●		●		●		●		●
	Standard														
	Generator														
Coil	Lamp coil														
	Charge coil		●		●	●	●	●	●	●					
Oil alert		●	●	●	●	●	●	●	●	●	●	●	●	●	●
Starter motor			●		●	●	●	●	●	●					
Reduction															

Specifications	Model / Type	GX390U1													
		VS49	VSD	VSD4	VSD7	VSD9	VTH4	VWA2	VWC	VWC7	VWC9	VWE	VWS	VWT4	VX39
Crankshaft	5/16" Tapered	●	●	●	●	●	●	●	●	●	●	●	●	●	●
	35mm Ø Tapered														
	25mm Ø Straight														
	25.4mm Ø Straight														
	20mm Ø Spline														
	25.4mm Ø Spline														
	30mm Ø Spline														
Air cleaner	Silent		●		●	●		●		●	●			●	
	Cyclone														
	Generator	●		●			●		●			●	●		●
Muffler	Silent		●		●	●		●		●	●				
	Standard														
	Generator														●
Coil	Lamp coil														
	Charge coil	●		●			●	●				●			
Oil alert		●	●	●	●	●	●	●	●	●	●	●	●	●	●
Starter motor		●		●			●	●				●		●	
Reduction															

Specifications	Model / Type	GX390U1													
		VX8	VXB	VXB7	VXB9	VXE2	VXE4	VXE6	VXE7	VXE8	VXE9	VXEB	VXG	VXG2	VXP7
Crankshaft	5/16" Tapered	●	●	●	●	●	●	●	●	●	●	●	●	●	●
	35mm Ø Tapered														
	25mm Ø Straight														
	25.4mm Ø Straight														
	20mm Ø Spline														
	25.4mm Ø Spline														
	30mm Ø Spline														
Air cleaner	Silent	●	●	●	●	●	●	●	●	●	●	●			●
	Cyclone														
	Generator												●	●	
Muffler	Silent	●	●	●	●	●	●	●	●	●	●	●			
	Standard														
	Generator														
Coil	Lamp coil														
	Charge coil					●	●	●	●	●	●	●			
Oil alert		●	●	●	●	●	●	●	●	●	●	●	●	●	●
Starter motor						●	●	●	●	●	●	●			
Reduction															

Specifications	Model / Type	GX390U1				GX390R1									
		VXQ4	PXU4	SM34	SMX4	ED6	EDD2	EDS2	EDS6	EDT6	EN6	ENT2	PXM8	QKB2	QNB2
Crankshaft	5/16" Tapered	●													
	35mm Ø Tapered					●	●	●	●	●	●	●			
	25mm Ø Straight			●	●										
	25.4mm Ø Straight													●	●
	20mm Ø Spline														
	25.4mm Ø Spline		●										●		
	30mm Ø Spline														
Air cleaner	Silent	●	●	●	●								●	●	●
	Cyclone														
	Generator					●	●	●	●	●	●	●			
Muffler	Silent	●	●	●	●								●	●	●
	Standard														
	Generator					●	●	●	●	●	●	●			
Coil	Lamp coil					●	●				●	●			
	Charge coil			●			●	●	●			●	●	●	●
Oil alert		●	●	●	●	●	●	●	●	●	●	●	●	●	●
Starter motor				●			●	●	●			●	●	●	●
Reduction															

Specifications	Model / Type	GX390R1													
		QWA2	VAA1	VAA8	VAC2	VAG2	VC2	VCN2	VD2	VDB2	VDE2	VEP9	VK2	VKB2	VKE4
Crankshaft	5/16" Tapered		●	●	●	●	●	●	●	●	●	●	●	●	●
	35mm Ø Tapered														
	25mm Ø Straight														
	25.4mm Ø Straight	●													
	20mm Ø Spline														
	25.4mm Ø Spline														
	30mm Ø Spline														
Air cleaner	Silent	●			●	●		●	●	●	●		●	●	
	Cyclone														
	Generator		●	●			●					●			●
Muffler	Silent	●			●	●		●	●	●	●		●	●	
	Standard														
	Generator		●	●											●
Coil	Lamp coil														
	Charge coil	●		●			●	●		●	●	●	●	●	●
Oil alert		●	●	●	●	●	●	●	●	●	●	●	●	●	●
Starter motor				●			●	●		●	●		●	●	●
Reduction															

Specifications	Model / Type	GX390R1													
		VKX4	VN17	VNG1	VNS9	VPE4	VPE5	VPE7	VPE9	VPX4	VPX5	VPX7	VPX9	VS39	VS49
Crankshaft	5/16" Tapered	●	●	●	●	●	●	●	●	●	●	●	●	●	●
	35mm Ø Tapered														
	25mm Ø Straight														
	25.4mm Ø Straight														
	20mm Ø Spline														
	25.4mm Ø Spline														
	30mm Ø Spline														
Air cleaner	Silent		●	●	●										
	Cyclone														
	Generator	●				●	●	●	●	●	●	●	●	●	●
Muffler	Silent		●	●	●	●		●		●		●		●	
	Standard														
	Generator	●													
Coil	Lamp coil														
	Charge coil				●	●	●	●	●						●
Oil alert		●	●	●	●	●	●	●	●	●	●	●	●	●	●
Starter motor					●	●	●	●	●						●
Reduction															

Specifications	Model / Type	GX390R1									GX390U2				
		VSD4	VTH4	VWC	VWC7	VWC9	VWE	VWS	VWT4	VXG	PXE8	PXU	PXU4	QXE8	QXU
Crankshaft	5/16" Tapered	●	●	●	●	●	●	●	●	●					
	35mm Ø Tapered														
	25mm Ø Straight														
	25.4mm Ø Straight													●	●
	20mm Ø Spline														
	25.4mm Ø Spline										●	●	●		
	30mm Ø Spline														
Air cleaner	Silent				●	●			●		●	●	●	●	●
	Cyclone														
	Generator	●	●	●			●	●		●					
Muffler	Silent				●	●					●	●	●	●	●
	Standard														
	Generator														
Coil	Lamp coil														
	Charge coil	●	●				●				●			●	
Oil alert		●	●	●	●	●	●	●	●	●					
Starter motor		●	●				●		●		●			●	
Reduction															

Specifications	Model / Type	GX390U2				GX390R2							
		SM32	SM34	SMX2	SXE4	ED6	EDD2	EDS6	EDT6	EN6	ENT2	PXM8	VWS
Crankshaft	5/16" Tapered												●
	35mm Ø Tapered					●	●	●	●	●	●		
	25mm Ø Straight	●	●	●	●								
	25.4mm Ø Straight												
	20mm Ø Spline												
	25.4mm Ø Spline											●	
	30mm Ø Spline												
Air cleaner	Silent	●	●	●	●							●	
	Cyclone												
	Generator					●	●	●	●	●	●		●
Muffler	Silent	●	●	●	●							●	
	Standard												
	Generator					●	●	●	●	●	●		
Coil	Lamp coil					●	●			●	●		
	Charge coil	●	●		●		●	●			●	●	
Oil alert													
Starter motor		●	●		●		●	●			●	●	
Reduction													

Fuel hose, general purpose hoses and vinyl hose

- The standard part fuel hose, general purpose hose and vinyl hose may be substituted by the coiled bulk part.
- When ordering the standard part fuel hose, general purpose hose and vinyl hose use the bulk part number written in the parts catalog in brackets ( ) underneath the part name.
- When exchanging the hose, cut and use at the specified length as mentioned in the part name.
  (For the method of cutting the bulk part, and method of filling out orders etc., please refer to the instructions issued with the bulk part.)

Bulk part number of fuel hose, general purpose hose and vinyl hose.

Example: 9 5 0 0 1 - 7 5 0 0 1 - 5 0 M

Bulk part number:
Refers to the bulk part.

Marking code (fuel hose and general purpose hose)
Change code (Vinyl hose)
Indicates number mark or change sequence, however, the code for the bulk part must be strictly 0 (zero).

Types of code:

- Fuel hose
  - 2: Red outside braid (3 mm inside dia. only)
  - 5: Black inside braid
  - 3: Red (3 mm inside dia. only)
  - 4: Ash gray with red stripe (3 mm inside dia. only)
  - 6: Black
- General hose
  - 1: Ash gray
  - 2: Ash gray
  - 3: Black
  - 5: Black
- Vinyl hose
  - 1: Clear
  - 2: Black
  - 3: Light red
  - 6: Light red
  - 7: Pale black

Lengths:
001: 1 m (standard)
003: 3 m
008: 8 m
} Application or specification of some parts is not settled.

I.D code: (fuel hose and general purpose hose)

30: 3.0 mm	50: 5.0 mm	70: 7.0 mm	11: 11 mm	12: 12 (outside dia. 17) mm
35: 3.5 mm	55: 5.3 mm, 5.5 mm	75: 7.3 mm, 7.5 mm	91: 12 (outside dia. 15) mm	14: 14 mm
45: 4.5 mm	65: 6.5 mm	80: 8.0 mm	92: 12 (outside dia. 16) mm	17: 17 mm

ID./OD. code: (vinyl hose)

01: ID. 2.9, OD. 6.8 mm	12: ID. 5.0, OD. 7.0 mm	21: ID. 8.0, OD. 9.0 mm	37: ID. 11.0, OD. 15.0 mm	50: ID. 16.0, OD. 19.0 mm
03: ID. 3.0, OD. 6.0 mm	10: ID. 5.0, OD. 8.0 mm	23: ID. 8.0, OD. 12.0 mm	38: ID. 12.0, OD. 13.0 mm	55: ID. 17.5, OD. 20.5 mm
05: ID. 3.5, OD. 6.5 mm	11: ID. 5.0, OD. 9.0 mm	25: ID. 9.0, OD. 11.0 mm	39: ID. 12.0, OD. 14.0 mm	60: ID. 22.0, OD. 27.0 mm
07: ID. 4.0, OD. 7.0 mm	14: ID. 6.0, OD. 9.0 mm	27: ID. 9.0, OD. 13.0 mm	40: ID. 12.0, OD. 16.0 mm	
08: ID. 4.5, OD. 6.5 mm	17: ID. 7.0, OD. 9.0 mm	33: ID. 10.0, OD. 14.0 mm	43: ID. 13.0, OD. 15.0 mm	
09: ID. 4.5, OD. 8.0 mm	19: ID. 7.0, OD. 11.0 mm	36: ID. 11.0, OD. 13.0 mm	45: ID. 14.0, OD. 18.0 mm	

Hose type:
1: Fuel hose
3: Vinyl hose
5: General hose

◎ **CAUTION: It is DANGEROUS to confuse the fuel hose with the general purpose hose or vinyl hose.**
Never use a general purpose hose or vinyl hose in place of a fuel hose or vice versa. Always use the correct bulk part in the parts catalogue, according to the service manual or the instructions issued with the bulk part.

E-2 E 1

CYLINDER HEAD

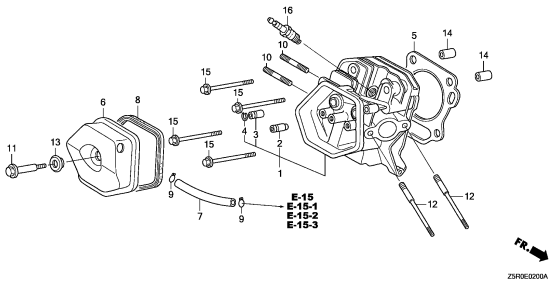

E-3 E 5

CYLINDER BARREL

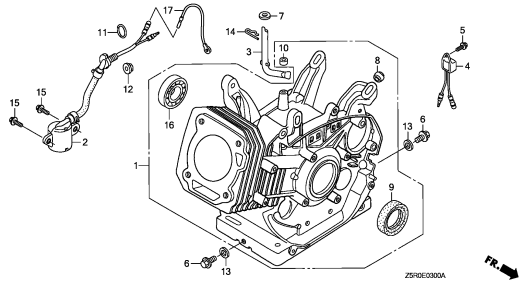

E-6 E 9

CRANKCASE COVER(1)

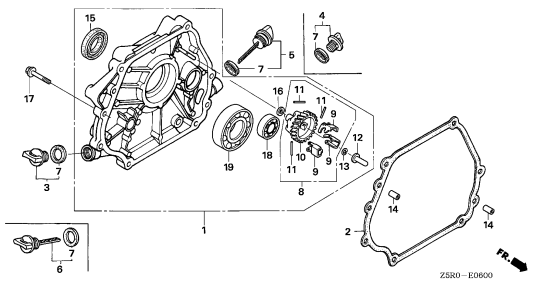

E-6-1 E15

CRANKCASE COVER(2)

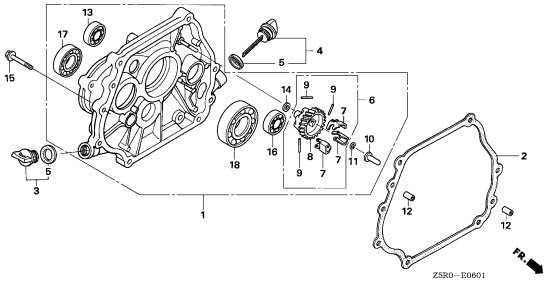

E-7 E16

CRANKSHAFT

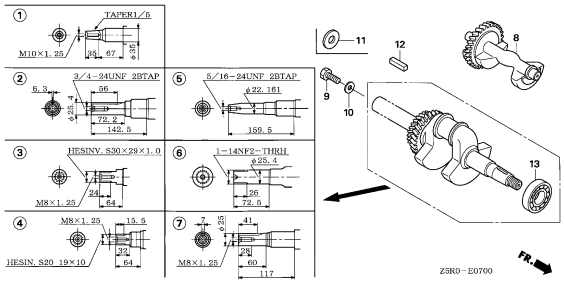

E-8 F 3

PISTON

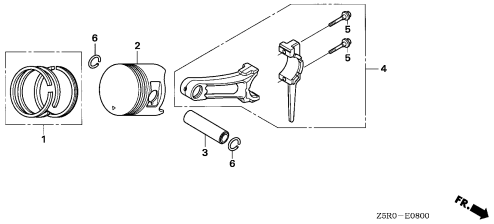

E-9 F11

CAMSHAFT

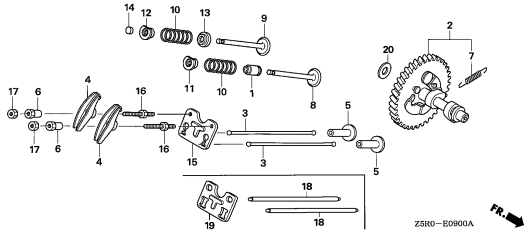

E-11 F13

RECOIL STARTER

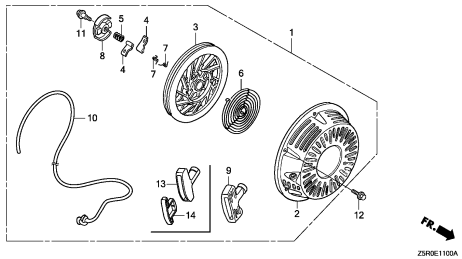

E-12 G 3

FAN COVER

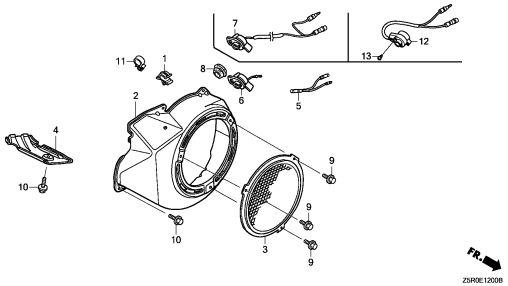

2

E-14 G 5

CARBURETOR(1)

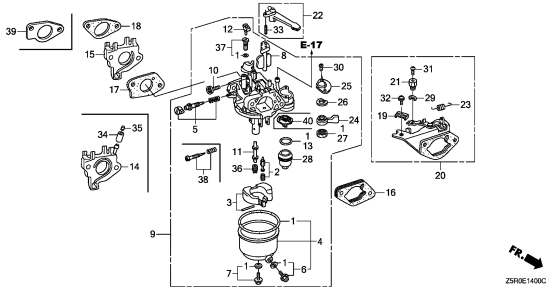

E-14-1 G14

CARBURETOR(2)

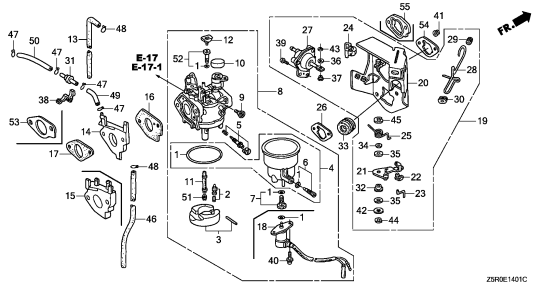

E-15 H 5

AIR CLEANER(1)

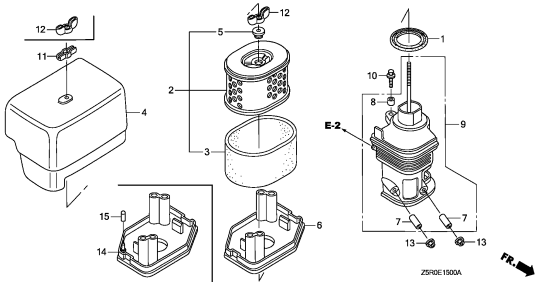

E-15-1 H 9

AIR CLEANER(2)

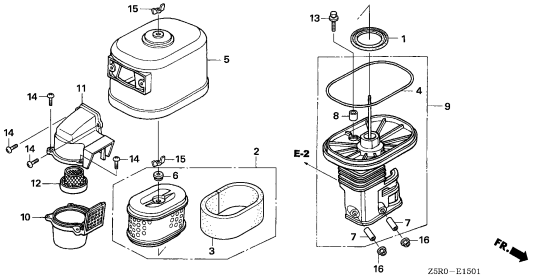

E-15-2 H10

AIR CLEANER(3)

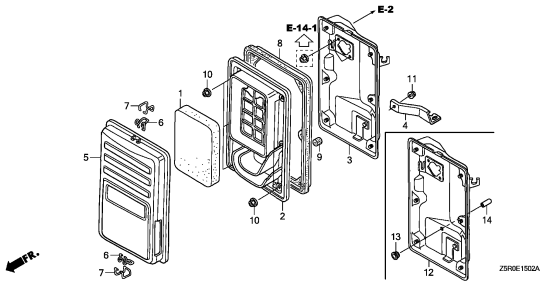

E-15-3 H12

AIR CLEANER(4)

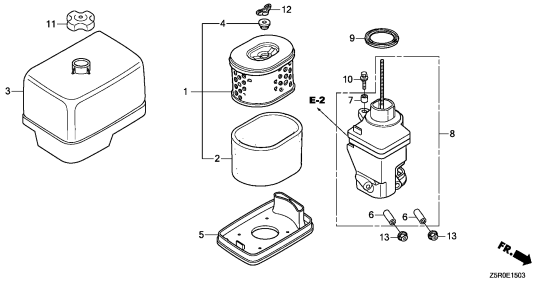

E-16 H13

MUFFLER(1)

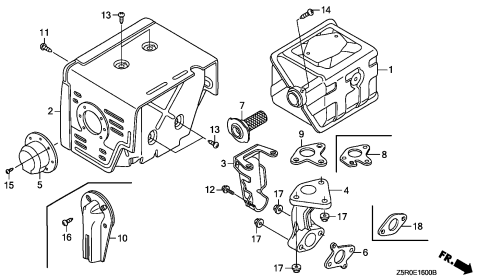

E-16-1 I 1

MUFFLER(2)

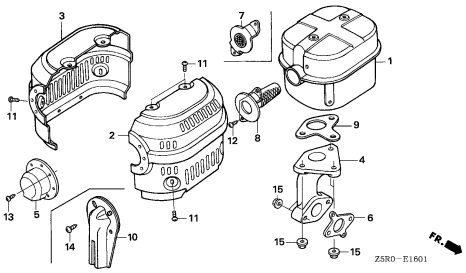

E-16-2 I 2

MUFFLER(3)

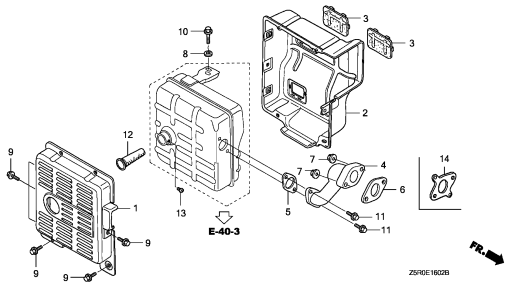

E-16-3 I 3

MUFFLER(4)

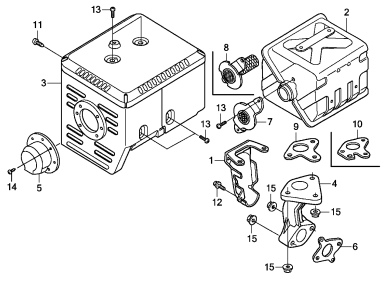

E-17 I 4

FUEL TANK(1)

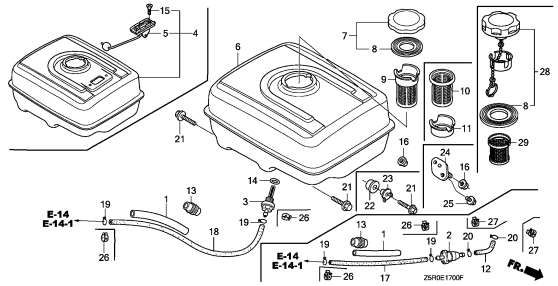

E-17-1 I12

FUEL TANK(2)

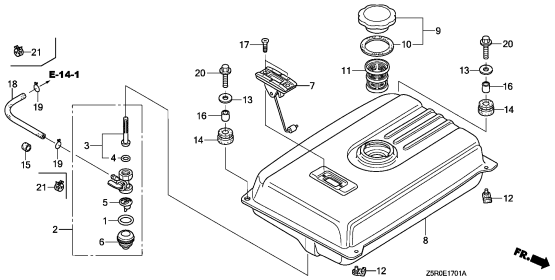

E-19 I14

FLYWHEEL

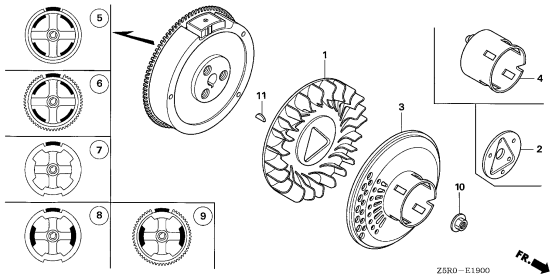

E-20 J 1

IGNITION COIL(1)

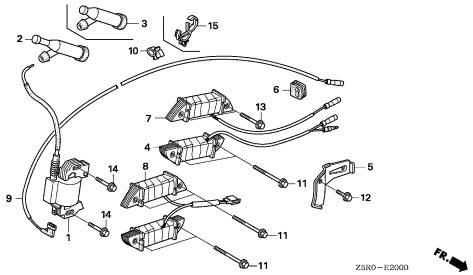

E-20-1 J 5

IGNITION COIL(2)

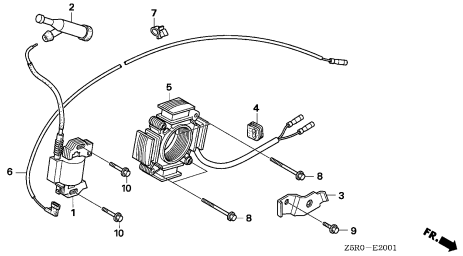

E-20-2 J 6

IGNITION COIL(3)

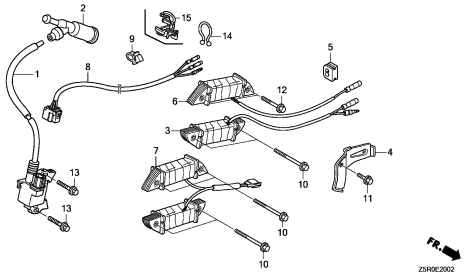

E-21 J 7

STARTER MOTOR

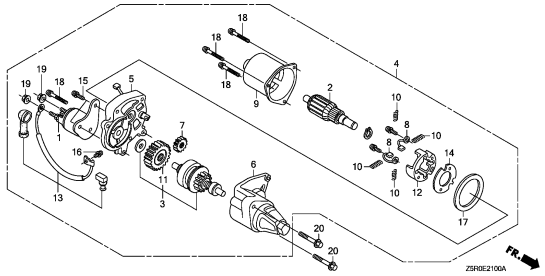

E-22 J11

CONTROL

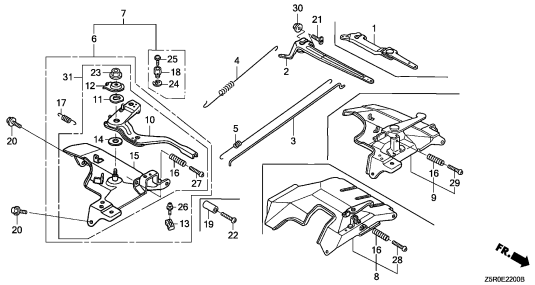

E-22-20 J16

AUTO THROTTLE

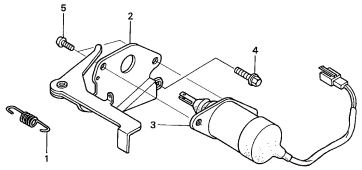

E-23 K 1

CONTROL BOX(1)

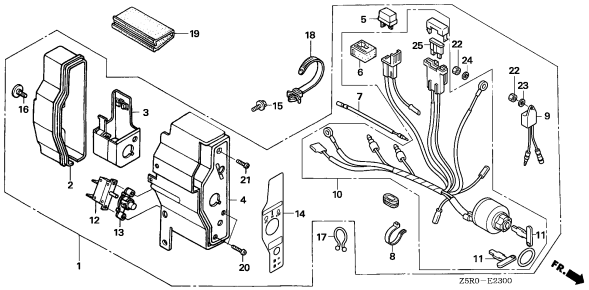

E-23-1 K 5

CONTROL BOX(2)

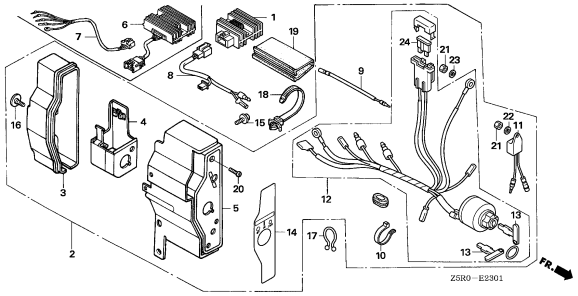

E-26 K 8

REDUCTION(1)

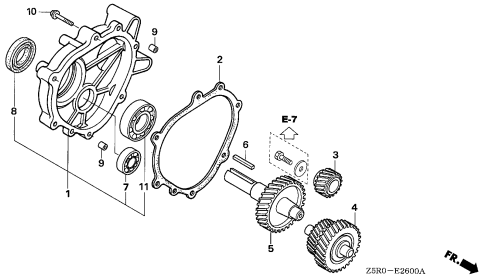

E-26-1 K 9

REDUCTION(2)

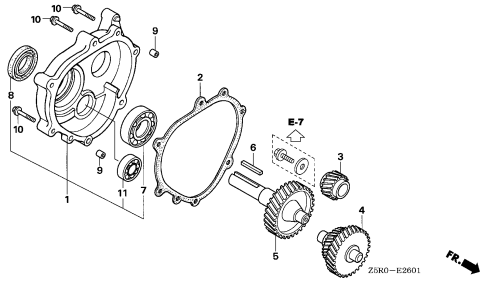

E-28 K10

LABEL

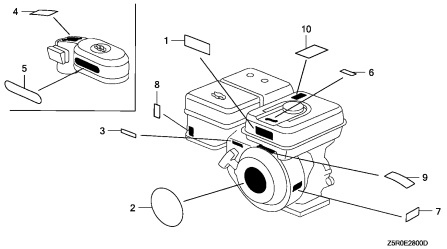

E-29 K14

TOOL

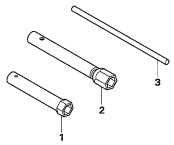

E-40 K15

OTHER PARTS(COMBINATION SWITCH)

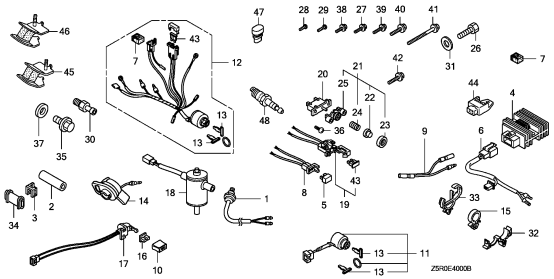

E-40-1 L 2

OTHER PARTS(MANUAL CHOKE)

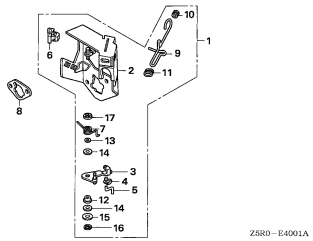

E-40-2 L 3

OTHER PARTS(AIR CLEANER)(1)

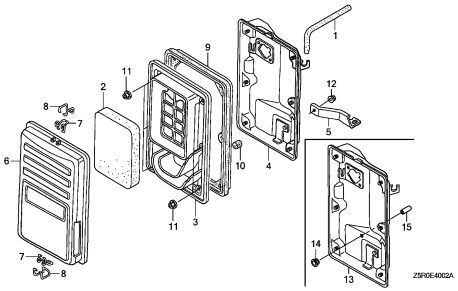

E-40-3 L 5

OTHER PARTS(MUFFLER)(1)

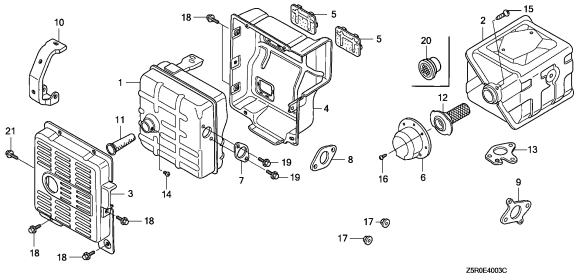

E-40-4 L 7

OTHER PARTS(FUEL TANK)

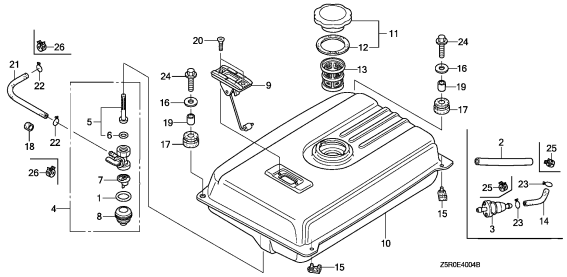

E-40-5 L 9

OTHER PARTS(LABEL/TOOL)

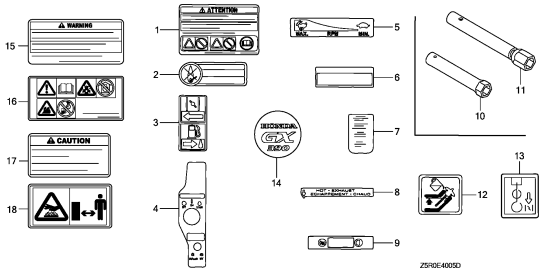

E-40-6 L13

OTHER PARTS(MUFFLER)(2)

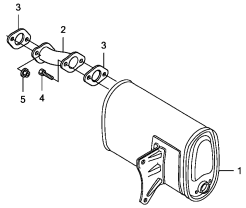

E-40-7 L14

OTHER PARTS(AIR CLEANER)(2)

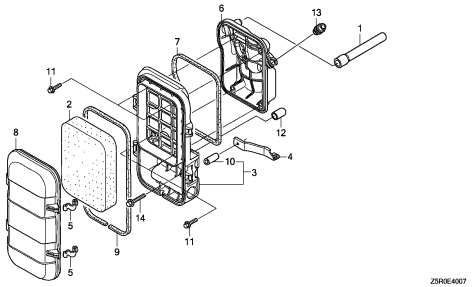

E-40-8 L15

OTHER PARTS(RECOIL STARTER)

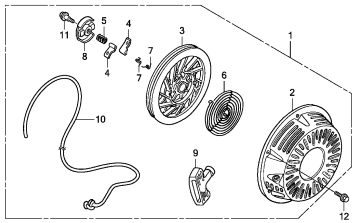

EOP-1 L16

GASKET KIT

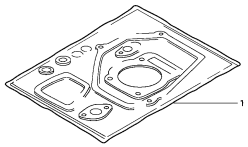

EOP-2 M 1

MUFFLER COVER

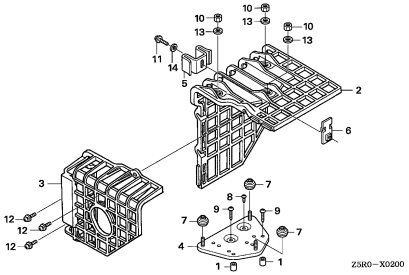

2

CYLINDER HEAD

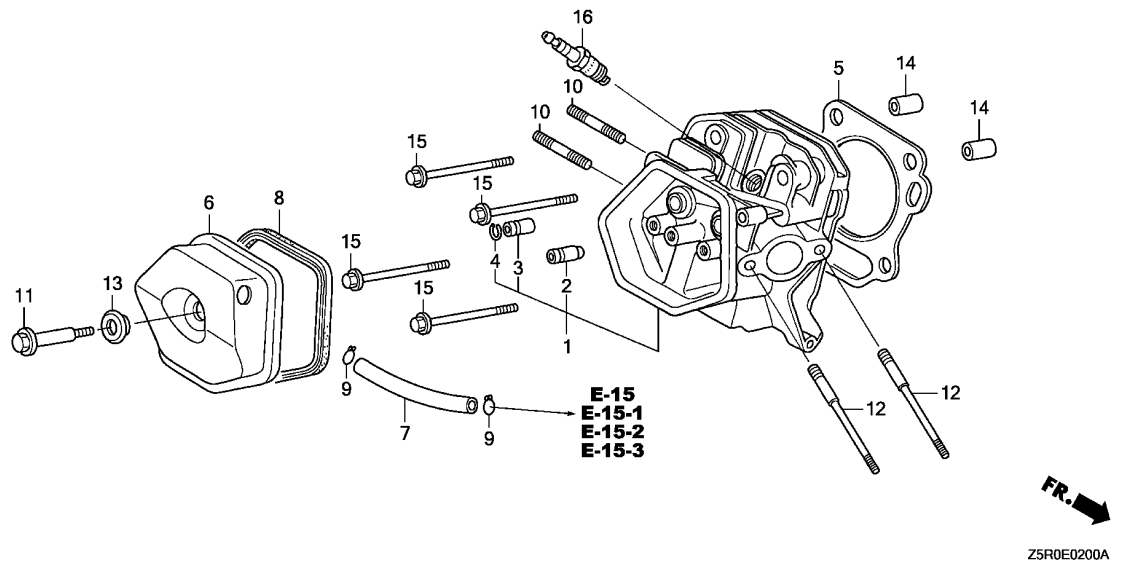

Ref. No.	L.O.N.	(Relative ref. Number) Description	F.R.T.

Ref. No.	Part No.	Description	Reqd. QTY GX 390 U1	GX 390 R1	GX 390 U2	GX 390 R2	Serial No.	Parts catalogue code
1	12200-ZF6-406	HEAD COMP., CYLINDER ·····	1	1	-	-		
	12210-Z5T-406	·····	-	-	1	1		
2	12204-ZE2-306	GUIDE, IN. VALVE(O.S.) ·····	1	1	1	1		
3	12205-ZE2-305	GUIDE, EX. VALVE(O.S.) ·····	1	1	1	1		
4	12216-ZE2-300	CLIP, VALVE GUIDE ·····	1	1	1	1		
5	12251-ZF6-W00	GASKET, CYLINDER HEAD ·····	1	1	-	-		
	12251-Z1C-801	GASKET, CYLINDER HEAD (THAI LEAKLESS)	(1)	(1)	-	-	-------- --------	LX2,QND,QNR2,QNR6,VDE2,VM2
	12251-Z5T-003	GASKET, CYLINDER HEAD (NIPPON LEAKLESS)	-	-	1	1		
6	12310-ZE2-020	COVER COMP., HEAD ·····	1	1	-	-	-------- --------	ED6,EDD2,EDS2,EDS6,EDT6,EN6,ENT2,HA2,HJA2,LKE,LX2,LXE2,LXE4 LXE8,LXQ4,LXU,PA2,PAE2,PXE8,PXM8,PXU,PXU4,QA2,QA26,QAA2,QAE2 QAE6,QAW,QE,QHB4,QK4,QKA4,QKB2,QME0,QNB2,QND,QNE2,QNE6,QNE8 QNK,QNR2,QNR6,QTR2,QWA2,QXB,QXB7,QXB9,QXE4,QXE6,QXE7,QXE8,QXE9 QXEB,QXH9,QXQ4,QXQ7,QXU,SCK4,SHQ4,SM32,SM34,SMC1,SMD3,SME0 SME6,SMX2,SMX4,STC4,SWA4,SXB,SXB7,SXB9,SXE4,SXE7,SXE8,SXE9 SXEB,SXQ4,SXU,VA2,VAA1,VAA8,VAC2,VAG2,VC2,VC2N,VCN2,VD2,VDB2 VDE2,VE39,VEP7,VEP9,VK2,VKB2,VKE4,VKE9,VKX4,VKX9,VM2,VMA2,VME2 VMS2,VN17,VN27,VNG1,VNG2,VNS9,VPE4,VPE5,VPE7,VPE9,VPX4,VPX5 VPX7,VPX9,VS39,VS49,VSD,VSD4,VSD7,VSD9,VTH4,VWA2,VWC,VWC7,VWC9 VWE,VWS,VWT4,VX39,VX8,VXB,VXB7,VXB9,VXE2,VXE4,VXE6,VXE7,VXE8 VXE9,VXEB,VXG,VXG2,VXP7,VXQ4
	12310-ZE3-791	COVER COMP., HEAD (BREATHER TUBE JOINT)	1	-	-	-	-------- --------	QC2,QDW9,QNE9,QSC2,QWA4,QWC4,QWH2,QWT2,QXC4,QXC6,QXC9,QXS4,SNC
	12310-Z5T-000	COVER, CYLINDER HEAD ·····	-	-	1	1		

Ref. No.	Part No.	Description	Reqd. QTY GX 390 U1	GX 390 R1	GX 390 U2	GX 390 R2	Serial No.		Parts catalogue code
7	95005-11105-30	TUBE, 11X105(95005-11001-30M)	1	1	-	-	--------	--------	HA2,HJA2,LKE,LX2,LXE2,LXE4,LXE8,LXQ4,LXU,PA2,PAE2,PXE8,PXM8 PXU,PXU4,QA2,QA26,QAA2,QAE2,QAE6,QAW,QE,QHB4,QK4,QKA4,QKB2 QMEO,QNB2,QND,QNE2,QNE6,QNE8,QNK,QNR2,QNR6,QTR2,QWA2,QXB,QXB7 QXB9,QXE4,QXE6,QXE7,QXE8,QXE9,QXEB,QXH9,QXQ4,QXQ7,QXU,SCK4 SHQ4,SM32,SM34,SMC1,SMD3,SMEO,SME6,SMX2,SMX4,STC4,SWA4,SXB SXB7,SXB9,SXE4,SXE7,SXE8,SXE9,SXEB,SXQ4,SXU,VA2,VAC2,VAG2,VCN2 VD2,VDB2,VDE2,VEP7,VK2,VKB2,VM2,VMA2,VME2,VN17,VN27,VNG1,VNG2 VNS9,VSD,VSD7,VSD9,VWA2,VWC7,VWC9,VWT4,VX8,VXB,VXB7,VXB9,VXE2 VXE4,VXE6,VXE7,VXE8,VXE9,VXEB,VXP7,VXQ4
	15721-ZB4-000	TUBE, BREATHER ·····	1	1	-	-	--------	--------	VC2,VC2N,VE39,VEP9,VKE4,VKE9,VKX4,VKX9,VMS2,VPE4,VPE5,VPE7 VPE9,VPX4,VPX5,VPX7,VPX9,VS39,VS49,VSD4,VTH4,VWC,VWE,VX39,VXG VXG2
	12315-ZE3-840	·····	1	-	-	-	--------	--------	QC2,QDW9,QNE9,QSC2,QWA4,QWC4,QWH2,QWT2,QXC4,QXC6,QXC9,QXS4,SNC
	12357-Z5T-010	·····	-	-	1	1	--------	--------	PXE8,PXM8,PXU,PXU4,QXE8,QXU,SM32,SM34,SMX2,SXE4
8	12391-ZE2-020	PACKING, HEAD COVER ·····	1	1	1	1			
9	17316-611-000	CLIP, BREATHER TUBE ·····	2	-	-	-	--------	--------	QC2,QDW9,QNE9,QSC2,QWA4,QWC4,QWH2,QWT2,QXC4,QXC6,QXC9,QXS4,SNC
10	92900-08032-0E	BOLT, STUD, 8X32 ·····	2	2	2	2	--------	--------	ED6,EDD2,EDS2,EDS6,EDT6,EN6,ENT2,HA2,HJA2,LKE,LX2,LXE2,LXE4 LXE8,LXQ4,LXU,PA2,PAE2,PXE8,PXM8,PXU,PXU4,QA2,QA26,QAA2,QAE2 QAE6,QAW,QC2,QDW9,QE,QHB4,QK4,QKA4,QKB2,QMEO,QNB2,QND,QNE2 QNE6,QNE8,QNE9,QNK,QNR2,QNR6,QSC2,QTR2,QWA2,QWA4,QWC4,QWH2 QWT2,QXB,QXB7,QXB9,QXC4,QXC6,QXC9,QXE4,QXE6,QXE7,QXE8,QXE9 QXEB,QXH9,QXQ4,QXQ7,QXS4,QXU,SCK4,SHQ4,SM32,SM34,SMC1,SMD3 SMEO,SME6,SMX2,SMX4,SNC,STC4,SWA4,SXB,SXB7,SXB9,SXE4,SXE7,SXE8 SXE9,SXEB,SXQ4,SXU,VA2,VAA1,VAA8,VAC2,VAG2,VC2,VC2N,VCN2,VD2 VDB2,VDE2,VE39,VK2,VKB2,VKE4,VKE9,VKX4,VKX9,VM2,VMA2,VME2,VN17 VN27,VNG1,VNG2,VNS9,VPE4,VPE7,VPX4,VPX7,VS39,VS49,VSD,VSD4 VSD7,VSD9,VTH4,VWA2,VWC7,VWC9,VWT4,VX39,VX8,VXB,VXB7,VXB9,VXE2 VXE4,VXE6,VXE7,VXE8,VXE9,VXEB,VXG,VXQ4
	90018-ZK6-P10	BOLT, STUD, 8X22 ·····	2	2	-	2	--------	--------	VEP7,VEP9,VPE5,VPE9,VPX5,VPX9,VWS,VXP7
	90047-ZE3-791	BOLT, STUD, 8X40 ·····	2	2	-	-	--------	--------	VMS2,VWC,VWE
	90012-KM9-000	BOLT, STUD, 8X34 ·····	2	-	-	-	--------	--------	VXG2
11	90014-ZE2-000	BOLT, HEAD COVER ·····	1	1	1	1			
12	90042-ZE8-000	BOLT, STUD, 8X131.5 ·····	2	2	2	2	--------	--------	HA2,HJA2,LKE,LX2,LXE2,LXE4,LXE8,LXQ4,LXU,PA2,PAE2,PXE8,PXM8 PXU,PXU4,QA2,QA26,QAA2,QAE2,QAE6,QAW,QC2,QDW9,QE,QHB4,QK4,QKA4 QKB2,QMEO,QNB2,QND,QNE2,QNE6,QNE8,QNE9,QNK,QNR2,QNR6,QSC2,QTR2 QWA2,QWA4,QWC4,QWH2,QWT2,QXB,QXB7,QXB9,QXC4,QXC6,QXC9,QXE4 QXE6,QXE7,QXE8,QXE9,QXEB,QXH9,QXQ4,QXQ7,QXS4,QXU,SCK4,SHQ4 SM32,SM34,SMC1,SMD3,SMEO,SME6,SMX2,SMX4,SNC,STC4,SWA4,SXB,SXB7 SXB9,SXE4,SXE7,SXE8,SXE9,SXEB,SXQ4,SXU,VA2,VAC2,VAG2,VCN2,VD2 VDB2,VDE2,VEP7,VK2,VKB2,VM2,VMA2,VME2,VN17,VN27,VNG1,VNG2,VNS9 VSD,VSD7,VSD9,VWA2,VWC7,VWC9,VWT4,VX8,VXB,VXB7,VXB9,VXE2,VXE4 VXE6,VXE7,VXE8,VXE9,VXEB,VXP7,VXQ4
	90042-ZE3-700	BOLT, STUD, 8X106 ·····	2	2	-	-	--------	--------	ED6,EDD2,EDS2,EDS6,EDT6,EN6,ENT2,VAA1,VAA8,VC2,VC2N,VE39,VEP9 VKE4,VKE9,VKX4,VKX9,VMS2,VPE4,VPE5,VPE7,VPE9,VPX4,VPX5,VPX7 VPX9,VS39,VS49,VSD4,VTH4,VWC,VWE,VWS,VX39,VXG,VXG2
			-	-	-	2	--------	--------	ED6,EDD2,EN6,ENT2,VWS
	90042-ZK6-D70	BOLT, STUD, 8X115 ·····	-	-	-	2	--------	--------	EDS6,EDT6
13	90441-ZE2-010	WASHER COMP., HEAD COVER ····	1	1	1	1			
14	94301-12200	DOWEL PIN, 12X20 ·····	2	2	2	2			
15	95701-10080-00	BOLT, FLANGE, 10X80 ·····	4	-	-	-	--------	--------	PXU4,QHB4,QXH9,SM34,SMX4,VC2N

CYLINDER HEAD

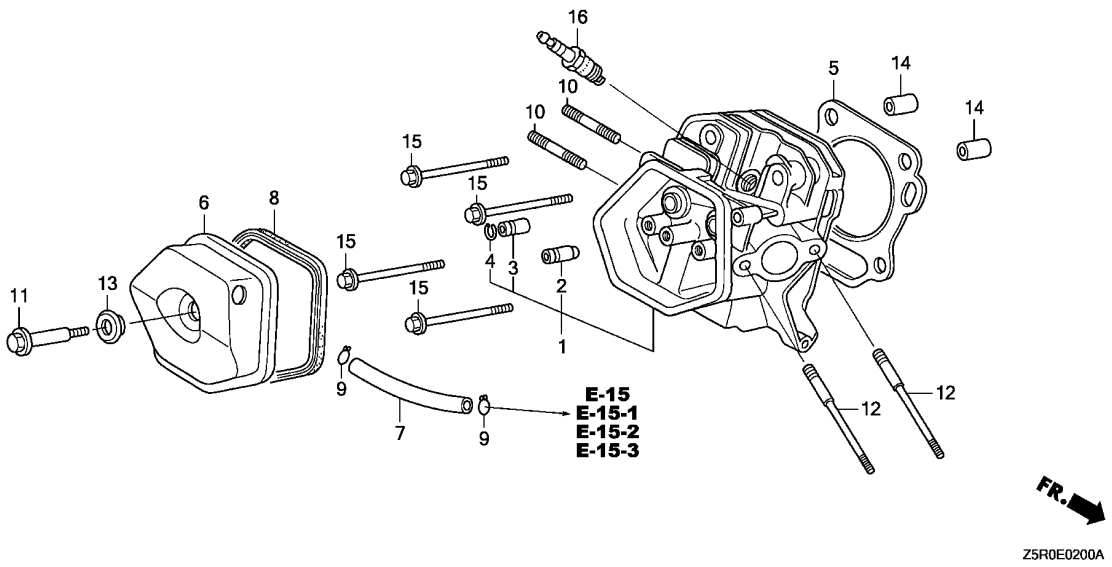

Ref. No.	Part No.	Description	Reqd. QTY GX 390 U1	GX 390 R1	GX 390 U2	GX 390 R2	Serial No.	Parts catalogue code
15)	95725-10080-00	BOLT, FLANGE, 10X80	4	-	-	-	-------- 1411816	ED6,EDD2,EDS2,EDS6,EDT6,EN6,ENT2,HA2,HJA2,LKE,LX2,LXE2,LXE4 LXE8,LXQ4,LXU,PA2,PAE2,PXE8,PXU,QA2,QA26,QAA2,QAE2,QAE6,QAW QC2,QDW9,QE,QK4,QKA4,QKB2,QMEO,QNB2,QND,QNE2,QNE6,QNE8,QNE9 QNK,QNR2,QNR6,QSC2,QTR2,QWA2,QWA4,QWC4,QWH2,QWT2,QXB,QXB7,QXB9 QXC4,QXC6,QXC9,QXE4,QXE6,QXE7,QXE8,QXE9,QXEB,QXQ4,QXQ7,QXS4 QXU,SCK4,SHQ4,SM32,SMC1,SMD3,SMEO,SME6,SMX2,SNC,STC4,SWA4,SXB SXB7,SXB9,SXE4,SXE7,SXE8,SXE9,SXEB,SXQ4,SXU,VA2,VAA1,VAA8,VAC2 VAG2,VC2,VCN2,VD2,VDB2,VDE2,VE39,VEP7,VEP9,VK2,VKB2,VKE4,VKE9 VKX4,VKX9,VM2,VMA2,VME2,VMS2,VN17,VN27,VNG1,VNG2,VNS9,VPE4 VPE5,VPE7,VPE9,VPX4,VPX5,VPX7,VPX9,VS39,VS49,VSD,VSD4,VSD7 VSD9,VTH4,VWA2,VWC,VWC7,VWC9,VWE,VWS,VWT4,VX39,VX8,VXB,VXB7 VXB9,VXE2,VXE4,VXE6,VXE7,VXE8,VXE9,VXEB,VXG,VXG2,VXP7,VXQ4
	95701-10080-00	.....	4	-	-	-	1411817 --------	ED6,EDD2,EDS2,EDS6,EDT6,EN6,ENT2,HA2,HJA2,LKE,LX2,LXE2,LXE4 LXE8,LXQ4,LXU,PA2,PAE2,PXE8,PXU,QA2,QA26,QAA2,QAE2,QAE6,QAW QC2,QDW9,QE,QK4,QKA4,QKB2,QMEO,QNB2,QND,QNE2,QNE6,QNE8,QNE9 QNK,QNR2,QNR6,QSC2,QTR2,QWA2,QWA4,QWC4,QWH2,QWT2,QXB,QXB7,QXB9 QXC4,QXC6,QXC9,QXE4,QXE6,QXE7,QXE8,QXE9,QXEB,QXQ4,QXQ7,QXS4 QXU,SCK4,SHQ4,SM32,SMC1,SMD3,SMEO,SME6,SMX2,SNC,STC4,SWA4,SXB SXB7,SXB9,SXE4,SXE7,SXE8,SXE9,SXEB,SXQ4,SXU,VA2,VAA1,VAA8,VAC2 VAG2,VC2,VCN2,VD2,VDB2,VDE2,VE39,VEP7,VEP9,VK2,VKB2,VKE4,VKE9 VKX4,VKX9,VM2,VMA2,VME2,VMS2,VN17,VN27,VNG1,VNG2,VNS9,VPE4 VPE5,VPE7,VPE9,VPX4,VPX5,VPX7,VPX9,VS39,VS49,VSD,VSD4,VSD7 VSD9,VTH4,VWA2,VWC,VWC7,VWC9,VWE,VWS,VWT4,VX39,VX8,VXB,VXB7 VXB9,VXE2,VXE4,VXE6,VXE7,VXE8,VXE9,VXEB,VXG,VXG2,VXP7,VXQ4
			-	4	4	4		

Ref. No.	Part No.	Description	Reqd. QTY GX 390 U1	GX 390 R1	GX 390 U2	GX 390 R2	Serial No.		Parts catalogue code
16	98079-56846	PLUG, SPARK(BPR6ES)(NGK) ····	1	1	1	1	--------	--------	HA2,HJA2,LKE,LX2,LXE2,LXE4,LXE8,LXQ4,LXU,PA2,PAE2,PXE8,PXM8 PXU,PXU4,QA2,QA26,QAA2,QAE2,QAE6,QAW,QC2,QDW9,QE,QHB4,QK4,QKA4 QKB2,QMEO,QNB2,QND,QNE2,QNE6,QNE8,QNE9,QNK,QNR2,QNR6,QSC2,QTR2 QWA2,QWA4,QWC4,QWH2,QWT2,QXB,QXB7,QXB9,QXC4,QXC6,QXC9,QXE4 QXE6,QXE7,QXE8,QXE9,QXEB,QXH9,QXQ4,QXQ7,QXS4,QXU,SCK4,SHQ4 SM32,SM34,SMC1,SMD3,SMEO,SME6,SMX2,SMX4,SNC,STC4,SWA4,SXB,SXB7 SXB9,SXE4,SXE7,SXE8,SXE9,SXEB,SXQ4,SXU,VA2,VAC2,VAG2,VC2,VC2N VCN2,VD2,VDB2,VDE2,VE39,VEP7,VEP9,VK2,VKB2,VKE4,VKE9,VKX4,VKX9 VM2,VMA2,VME2,VMS2,VN17,VN27,VNG1,VNG2,VNS9,VPE4,VPE5,VPE7 VPE9,VPX4,VPX5,VPX7,VPX9,VS39,VS49,VSD,VSD4,VSD7,VSD9,VTH4 VWA2,VWC7,VWC9,VWT4,VX39,VX8,VXB,VXB7,VXB9,VXE2,VXE4,VXE6,VXE7 VXE8,VXE9,VXEB,VXG,VXG2,VXP7,VXQ4
	98079-56855	PLUG, SPARK(W20EPR-U)(DENSO)	1	1	1	1	--------	--------	HA2,HJA2,LKE,LX2,LXE2,LXE4,LXE8,LXQ4,LXU,PA2,PAE2,PXE8,PXM8 PXU,PXU4,QA2,QA26,QAA2,QAE2,QAE6,QAW,QC2,QDW9,QE,QHB4,QK4,QKA4 QKB2,QMEO,QNB2,QND,QNE2,QNE6,QNE8,QNE9,QNK,QNR2,QNR6,QSC2,QTR2 QWA2,QWA4,QWC4,QWH2,QWT2,QXB,QXB7,QXB9,QXC4,QXC6,QXC9,QXE4 QXE6,QXE7,QXE8,QXE9,QXEB,QXH9,QXQ4,QXQ7,QXS4,QXU,SCK4,SHQ4 SM32,SM34,SMC1,SMEO,SME6,SMX2,SMX4,SNC,STC4,SWA4,SXB,SXB7,SXB9 SXE4,SXE7,SXE8,SXE9,SXEB,SXQ4,SXU,VA2,VAC2,VAG2,VC2,VC2N,VCN2 VD2,VDB2,VDE2,VE39,VEP7,VEP9,VK2,VKB2,VKE4,VKE9,VKX4,VKX9,VM2 VMA2,VME2,VMS2,VN17,VN27,VNG1,VNG2,VNS9,VPE4,VPE5,VPE7,VPE9 VPX4,VPX5,VPX7,VPX9,VS39,VS49,VSD,VSD4,VSD7,VSD9,VTH4,VWA2 VWC7,VWC9,VWT4,VX39,VX8,VXB,VXB7,VXB9,VXE2,VXE4,VXE6,VXE7,VXE8 VXE9,VXEB,VXG,VXG2,VXP7,VXQ4
	98079-55846	PLUG, SPARK(BPR5ES)(NGK) ····	(1)	(1)	(1)	-	--------	--------	ED6,EDD2,EDS2,EN6,HJA2,LKE,LX2,LXE4,LXE8,LXQ4,LXU,PA2,PAE2 PXE8,PXM8,PXU,PXU4,QA26,QAA2,QAE6,QAW,QC2,QDW9,QHB4,QK4,QKA4 QKB2,QMEO,QNB2,QND,QNE6,QNE8,QNK,QNR2,QNR6,QSC2,QTR2,QWA2,QWA4 QWC4,QWH2,QWT2,QXB7,QXB9,QXC4,QXC6,QXE4,QXE6,QXE7,QXE8,QXE9 QXH9,QXQ4,QXQ7,QXS4,QXU,SCK4,SHQ4,SM32,SM34,SMC1,SMD3,SMEO SME6,SMX2,SMX4,STC4,SWA4,SXB7,SXB9,SXE4,SXE7,SXE8,SXE9,SXQ4 SXU,VAA1,VAA8,VAC2,VAG2,VC2,VC2N,VCN2,VD2,VDB2,VDE2,VE39,VEP7 VEP9,VK2,VKB2,VKE4,VKE9,VKX4,VKX9,VM2,VMA2,VME2,VMS2,VN17,VN27 VNG1,VNG2,VNS9,VPE4,VPE5,VPE7,VPE9,VPX4,VPX5,VPX7,VPX9,VS39 VS49,VSD,VSD4,VSD7,VSD9,VTH4,VWA2,VWC7,VWC9,VWT4,VX39,VX8,VXB7 VXB9,VXE4,VXE6,VXE7,VXE8,VXE9,VXG,VXG2,VXP7,VXQ4
	98079-55855	PLUG, SPARK(W16EPR-U)(DENSO)	(1)	(1)	(1)	-	--------	--------	EDS2,EN6,LKE,LX2,LXE4,LXE8,LXQ4,LXU,PA2,PAE2,PXE8,PXM8,PXU PXU4,QA26,QAA2,QAE6,QAW,QC2,QDW9,QHB4,QK4,QKA4,QKB2,QMEO,QNB2 QND,QNE6,QNE8,QNK,QNR2,QNR6,QSC2,QTR2,QWA2,QWA4,QWC4,QWH2,QWT2 QXB7,QXB9,QXC4,QXC6,QXE4,QXE6,QXE7,QXE8,QXE9,QXH9,QXQ4,QXQ7 QXS4,QXU,SCK4,SHQ4,SM32,SM34,SMC1,SMD3,SMEO,SME6,SMX2,SMX4,SNC STC4,SWA4,SXB7,SXB9,SXE4,SXE7,SXE8,SXE9,SXQ4,SXU,VAA1,VAA8 VAC2,VAG2,VC2,VC2N,VCN2,VD2,VDB2,VDE2,VE39,VEP7,VEP9,VK2,VKB2 VKE4,VKE9,VKX4,VKX9,VM2,VMA2,VME2,VMS2,VN17,VN27,VNG1,VNG2 VNS9,VPE4,VPE5,VPE7,VPE9,VPX4,VPX5,VPX7,VPX9,VS39,VS49,VSD VSD4,VSD7,VSD9,VTH4,VWA2,VWC7,VWC9,VWT4,VX39,VX8,VXB7,VXB9 VXE4,VXE6,VXE7,VXE8,VXE9,VXG,VXG2,VXP7,VXQ4
			1	1	-	-	--------	--------	ED6,EDD2,EDS6,EDT6,ENT2,LXE2,QA2,QAE2,QE,QNE2,QNE9,QXB,QXC9 QXEB,SXB,SXEB,VA2,VWC,VWE,VWS,VXB,VXE2,VXEB
	98079-55846	PLUG, SPARK(BPR5ES)(NGK) ····	1	1	-	-	--------	--------	EDS6,EDT6,ENT2,HA2,LXE2,QA2,QAE2,QE,QNE2,QNE9,QXB,QXC9,QXEB SNC,SXB,SXEB,VA2,VWC,VWE,VWS,VXB,VXE2,VXEB
	98079-55841	PLUG, SPARK(BP5ES)(NGK) ·····	(1)	-	-	-	--------	--------	SMD3
	98079-55846	PLUG, SPARK(BPR5ES)(NGK) ····	-	-	-	1	--------	--------	ED6,EDD2,EDS6,EDT6,EN6,ENT2,VWS
	98079-55855	PLUG, SPARK(W16EPR-U)(DENSO)	-	-	-	1	--------	--------	ED6,EDD2,EDS6,EDT6,EN6,ENT2,VWS
	98079-55846	PLUG, SPARK(BPR5ES)(NGK) ····	-	-	-	(1)	--------	--------	PXM8
	98079-55855	PLUG, SPARK(W16EPR-U)(DENSO)	-	-	-	(1)	--------	--------	PXM8

CYLINDER BARREL

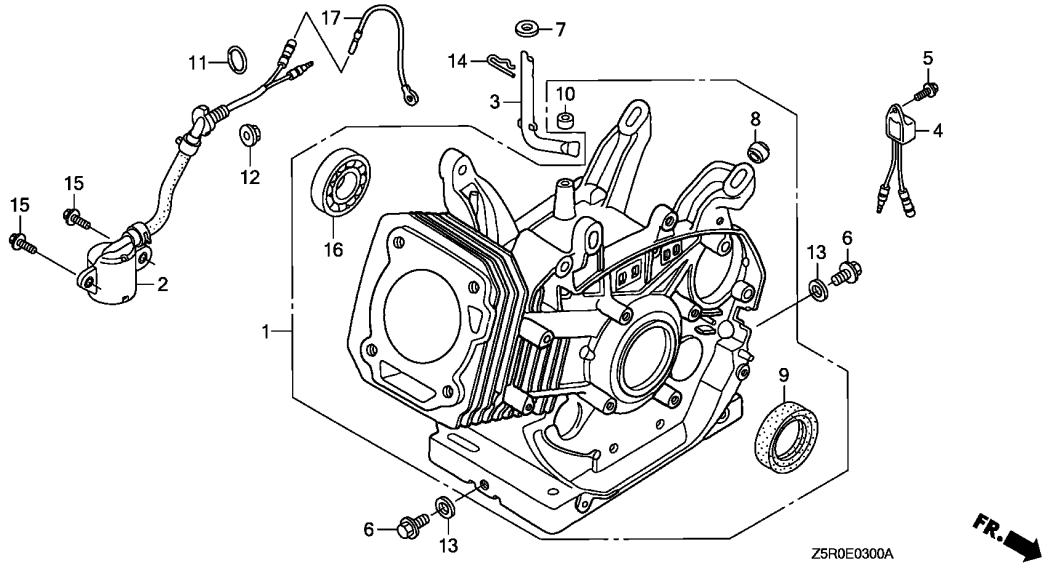

Ref. No.	L.O.N.	(Relative ref. Number) Description	F.R.T.

Ref. No.	Part No.	Description	Reqd. QTY GX 390 U1	GX 390 R1	GX 390 U2	GX 390 R2	Serial No.		Parts catalogue code
1	12000-ZF6-417	BARREL ASSY., CYLINDER(ALERT)	1	1	-	-	--------	--------	ED6,EDT6,EN6,HA2,HJA2,LX2,LXQ4,LXU,PA2,PXU,PXU4,QA2,QA26,QAA2 QAW,QDW9,QK4,QWA2,QWA4,QWC4,QWT2,QXB,QXB7,QXB9,QXC4,QXC6,QXC9 QXQ4,QXQ7,QXS4,QXU,SMD3,SME6,SMX2,SMX4,SNC,SWA4,SXB,SXB7,SXB9 SXQ4,SXU,VA2,VAA1,VAC2,VAG2,VD2,VEP9,VKX4,VKX9,VM2,VMA2,VN17 VNG1,VPX4,VPX5,VPX7,VPX9,VS39,VSD,VSD7,VSD9,VWC,VWC7,VWC9,VWS VX39,VX8,VXB,VXB7,VXB9,VXG,VXG2,VXP7,VXQ4
	12000-ZF6-435	BARREL ASSY., CYLINDER (SELFSTARTER+ALERT)	1	1	-	-	--------	--------	EDD2,EDS2,EDS6,ENT2,LKE,LXE2,LXE4,LXE8,PAE2,PXE8,PXM8,QAE2 QAE6,QC2,QKA4,QKB2,QMEO,QNB2,QND,QNE2,QNE6,QNE8,QNE9,QNR2,QNR6 QSC2,QTR2,QWH2,QXE4,QXE6,QXE7,QXE8,QXE9,QXEB,QXH9,SCK4,SM32 SM34,SMEO,STC4,SXE4,SXE7,SXE8,SXE9,SXEB,VAA8,VC2,VC2N,VCN2 VDB2,VDE2,VE39,VEP7,VK2,VKB2,VKE4,VKE9,VME2,VMS2,VN27,VNG2 VNS9,VPE4,VPE5,VPE7,VPE9,VS49,VSD4,VTH4,VWA2,VWE,VWT4,VXE2 VXE4,VXE6,VXE7,VXE8,VXE9,VXEB
	12000-ZF6-416	BARREL ASSY., CYLINDER ------	1	-	-	-	--------	--------	QE,QHB4,SHQ4,SMC1
	12000-ZF6-418	----------	1	-	-	-	--------	--------	QNK
	12000-Z5T-407	BARREL ASSY., CYLINDER(ALERT)	-	-	1	1	--------	--------	ED6,EDT6,EN6,PXU,PXU4,QXU,SMX2,VWS
	12000-Z5T-405	BARREL ASSY., CYLINDER (SELFSTARTER+ALERT)	-	-	1	1	--------	--------	EDD2,EDS6,ENT2,PXE8,PXM8,QXE8,SM32,SM34,SXE4

CYLINDER BARREL

Ref. No.	Part No.	Description	Reqd. QTY GX 390 U1	GX 390 R1	GX 390 U2	GX 390 R2	Serial No.		Parts catalogue code
2	35480-ZF6-003	SWITCH ASSY., OIL LEVEL ·····	1	1	-	-	--------	--------	PXM8,PXU4,SM34,SMX4
			1	1	-	-	1412957	--------	ED6,EDD2,EDS2,EDS6,EDT6,EN6,ENT2,HA2,HJA2,LKE,LX2,LXE2,LXE4 LXQ4,PA2,PAE2,PXE8,PXU,QA2,QAE2,QAE6,QAW,QC2,QDW9,QK4,QKA4 QKB2,QME0,QNB2,QND,QNE2,QNE6,QNE8,QNR2,QNR6,QSC2,QWA2,QWA4 QWC4,QWH2,QWT2,QXB7,QXB9,QXC4,QXC6,QXC9,QXE4,QXE6,QXE7,QXE8 QXE9,QXH9,QXQ4,QXQ7,QXS4,QXU,SCK4,SM32,SMD3,SME0,SME6,SMX2,SNC STC4,SWA4,SXB,SXB7,SXB9,SXE4,SXU,VA2,VAA1,VAA8,VAC2,VAG2,VC2 VC2N,VCN2,VD2,VDB2,VDE2,VEP9,VK2,VKB2,VKE4,VKX4,VM2,VN17,VN27 VNG1,VNS9,VPE4,VPE5,VPE7,VPE9,VPX4,VPX5,VPX7,VPX9,VS39,VS49 VSD,VSD4,VSD7,VSD9,VTH4,VWC,VWC7,VWC9,VWE,VWS,VWT4,VXB,VXB7 VXB9,VXE2,VXE4,VXE6,VXE7,VXE9,VXG,VXQ4
	15510-ZE2-043	·····	1	-	-	-	--------	--------	LXE8,LXU,QA26,QAA2,QNE9,QTR2,QXB,QXEB,SXE7,SXE8,SXE9,SXEB,SXQ4 VE39,VEP7,VKE9,VKX9,VMA2,VME2,VMS2,VNG2,VWA2,VX39,VX8,VXE8 VXEB,VXG2,VXP7
			1	-	-	-	--------	1412956	ED6,EDD2,EDS2,EDS6,EDT6,EN6,ENT2,HA2,HJA2,LKE,LX2,LXE2,LXE4 LXQ4,PA2,PAE2,PXE8,PXU,QA2,QAE2,QAE6,QAW,QC2,QDW9,QK4,QKA4 QKB2,QME0,QNB2,QND,QNE2,QNE6,QNE8,QNR2,QNR6,QSC2,QWA2,QWA4 QWC4,QWH2,QWT2,QXB7,QXB9,QXC4,QXC6,QXC9,QXE4,QXE6,QXE7,QXE8 QXE9,QXH9,QXQ4,QXQ7,QXS4,QXU,SCK4,SM32,SMD3,SME0,SME6,SMX2,SNC STC4,SWA4,SXB,SXB7,SXB9,SXE4,SXU,VA2,VAA1,VAA8,VAC2,VAG2,VC2 VCN2,VD2,VDB2,VDE2,VEP9,VK2,VKB2,VKE4,VKX4,VM2,VN17,VN27,VNG1 VNS9,VPE4,VPE5,VPE7,VPE9,VPX4,VPX5,VPX7,VPX9,VS39,VS49,VSD VSD4,VSD7,VSD9,VTH4,VWC,VWC7,VWC9,VWE,VWS,VWT4,VXB,VXB7,VXB9 VXE2,VXE4,VXE6,VXE7,VXE9,VXG,VXQ4
	15510-ZE2-053	·····	1	-	-	-	--------	1412956	VC2N
			-	1	-	-	--------	1412956	ED6,EDD2,EDS2,EDS6,EDT6,EN6,ENT2,QKB2,QNB2,QWA2,VAA1,VAA8,VAC2 VAG2,VC2,VCN2,VD2,VDB2,VDE2,VEP9,VK2,VKB2,VKE4,VKX4,VN17,VNG1 VNS9,VPE4,VPE5,VPE7,VPE9,VPX4,VPX5,VPX7,VPX9,VS39,VS49,VSD4 VTH4,VWC,VWC7,VWC9,VWE,VWS,VWT4,VXG
	35480-ZF6-003	·····	-	-	1	1			
3	16541-ZE3-010	SHAFT, GOVERNOR ARM ·····	1	1	1	1			
4	34150-ZH7-003	ALERT UNIT, OIL ·····	1	-	-	-	--------	--------	LXU,QA26,QAA2,QTR2,QXB,SXQ4,VE39,VKE9,VKX9,VMA2,VWA2,VX39,VX8 VXG2,VXP7
	34150-ZH7-013	·····	1	-	-	-	--------	--------	PXU4,SMX4
	34150-ZH7-003	·····	1	-	-	-	--------	1419413	ED6,EDD2,EDS2,EDS6,EDT6,EN6,ENT2,HA2,HJA2,LX2,LXQ4,PA2,PXU,QA2 QAW,QC2,QDW9,QK4,QKB2,QNB2,QWA2,QWA4,QWC4,QWT2,QXB7,QXB9,QXC4 QXC6,QXC9,QXQ4,QXQ7,QXS4,QXU,SMD3,SME6,SMX2,SNC,SWA4,SXB,SXB7 SXB9,SXU,VA2,VAA1,VAC2,VAG2,VCN2,VD2,VDB2,VEP9,VKE4,VKX4,VM2 VN17,VNG1,VPE4,VPE5,VPE7,VPE9,VPX4,VPX5,VPX7,VPX9,VS39,VS49 VSD,VSD4,VSD7,VSD9,VTH4,VWC,VWC7,VWC9,VWE,VWS,VWT4,VXB,VXB7 VXB9,VXG,VXQ4
	34150-ZH7-013	·····	1	-	-	-	1419414	--------	ED6,EDD2,EDS2,EDS6,EDT6,EN6,ENT2,HA2,HJA2,LX2,LXQ4,PA2,PXU,QA2 QAW,QC2,QDW9,QK4,QKB2,QNB2,QWA2,QWA4,QWC4,QWT2,QXB7,QXB9,QXC4 QXC6,QXC9,QXQ4,QXQ7,QXS4,QXU,SMD3,SME6,SMX2,SNC,SWA4,SXB,SXB7 SXB9,SXU,VA2,VAA1,VAC2,VAG2,VCN2,VD2,VDB2,VEP9,VKE4,VKX4,VM2 VN17,VNG1,VPE4,VPE5,VPE7,VPE9,VPX4,VPX5,VPX7,VPX9,VS39,VS49 VSD,VSD4,VSD7,VSD9,VTH4,VWC,VWC7,VWC9,VWE,VWS,VWT4,VXB,VXB7 VXB9,VXG,VXQ4
			-	1	-	-	--------	--------	ED6,EDD2,EDS2,EDS6,EDT6,EN6,ENT2,PXM8,QKB2,QNB2,QWA2,VAA1,VAC2 VAG2,VCN2,VD2,VDB2,VEP9,VKE4,VKX4,VN17,VNG1,VPE4,VPE5,VPE7 VPE9,VPX4,VPX5,VPX7,VPX9,VS39,VS49,VSD4,VTH4,VWC,VWC7,VWC9,VWE VWS,VWT4,VXG

CYLINDER BARREL

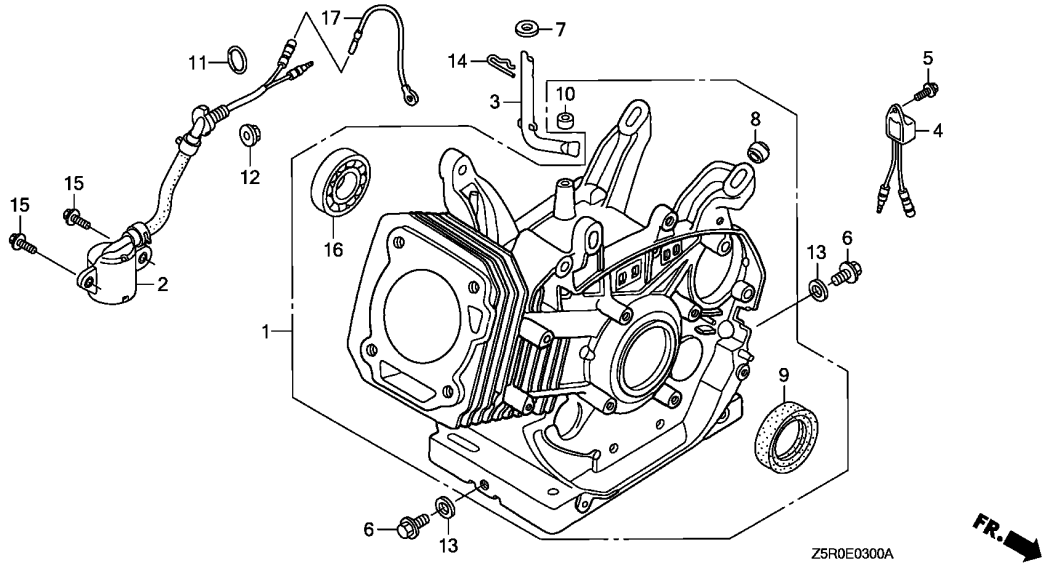

Ref. No.	Part No.	Description	Reqd. QTY GX 390 U1	GX 390 R1	GX 390 U2	GX 390 R2	Serial No.	Parts catalogue code
5	90013-883-000	BOLT, FLANGE, 6X12(CT200) ---	1	1	-	-	-------- --------	ED6,EDD2,EDS2,EDS6,EDT6,EN6,ENT2,HA2,HJA2,LX2,LXQ4,LXU,PA2 PXM8,PXU,PXU4,QA2,QA26,QAA2,QAW,QC2,QDW9,QK4,QKB2,QNB2,QTR2 QWA2,QWA4,QWC4,QWT2,QXB,QXB7,QXB9,QXC4,QXC6,QXC9,QXQ4,QXQ7 QXS4,QXU,SMD3,SME6,SMX2,SMX4,SNC,SWA4,SXB,SXB7,SXB9,SXQ4,SXU VA2,VAA1,VAC2,VAG2,VCN2,VD2,VDB2,VE39,VEP9,VKE4,VKE9,VKX4,VKX9 VM2,VMA2,VN17,VNG1,VPE4,VPE5,VPE7,VPE9,VPX4,VPX5,VPX7,VPX9 VS39,VS49,VSD,VSD4,VSD7,VSD9,VTH4,VWA2,VWC,VWC7,VWC9,VWE,VWS VWT4,VX39,VX8,VXB,VXB7,VXB9,VXG,VXG2,VXP7,VXQ4
6	90131-883-000	BOLT, DRAIN PLUG, 12X15 -----	2	2	2	2		
7	90446-KE1-000	WASHER, 8.2X17X0.8 ----------	1	1	1	1		
8	90801-ZE2-003	PLUG, SEALING(RUBBER 10MM) --	1	-	-	-	-------- 1096244	QE,QNK,SHQ4,SMC1
9	91201-ZE3-004	OIL SEAL, 35X52X8 ----------	1	1	-	-		
	91201-Z1C-003	----------	-	-	1	1		
10	91203-952-771	OIL SEAL, 8X14X5 ----------	1	1	1	1		
11	91353-671-004	O-RING, 14MM(NOK) ----------	1	1	1	1	-------- --------	ED6,EDD2,EDS2,EDS6,EDT6,EN6,ENT2,HA2,HJA2,LKE,LX2,LXE2,LXE4 LXE8,LXQ4,LXU,PA2,PAE2,PXE8,PXM8,PXU,PXU4,QA2,QA26,QAA2,QAE2 QAE6,QAW,QC2,QDW9,QK4,QKA4,QKB2,QMEO,QNB2,QND,QNE2,QNE6,QNE8 QNE9,QNR2,QNR6,QSC2,QTR2,QWA2,QWA4,QWC4,QWH2,QWT2,QXB,QXB7 QXB9,QXC4,QXC6,QXC9,QXE4,QXE6,QXE7,QXE8,QXE9,QXEB,QXH9,QXQ4 QXQ7,QXS4,QXU,SCK4,SM32,SM34,SMD3,SMEO,SME6,SMX2,SMX4,SNC,STC4 SWA4,SXB,SXB7,SXB9,SXE4,SXE7,SXE8,SXE9,SXEB,SXQ4,SXU,VA2,VAA1 VAA8,VAC2,VAG2,VC2,VC2N,VCN2,VD2,VDB2,VDE2,VE39,VEP7,VEP9,VK2 VKB2,VKE4,VKE9,VKX4,VKX9,VM2,VMA2,VME2,VMS2,VN17,VN27,VNG1 VNG2,VNS9,VPE4,VPE5,VPE7,VPE9,VPX4,VPX5,VPX7,VPX9,VS39,VS49 VSD,VSD4,VSD7,VSD9,VTH4,VWA2,VWC,VWC7,VWC9,VWE,VWS,VWT4,VX39 VX8,VXB,VXB7,VXB9,VXE2,VXE4,VXE6,VXE7,VXE8,VXE9,VXEB,VXG,VXG2 VXP7,VXQ4

CYLINDER BARREL

Ref. No.	Part No.	Description	Reqd. QTY GX 390 U1	GX 390 R1	GX 390 U2	GX 390 R2	Serial No.	Parts catalogue code
12	94050-10000	NUT, FLANGE, 10MM ·····	1	1	1	1	-------- --------	ED6,EDD2,EDS2,EDS6,EDT6,EN6,ENT2,HA2,HJA2,LKE,LX2,LXE2,LXE4 LXE8,LXQ4,LXU,PA2,PAE2,PXE8,PXM8,PXU,PXU4,QA2,QA26,QAA2,QAE2 QAE6,QAW,QC2,QDW9,QK4,QKA4,QKB2,QMEO,QNB2,QND,QNE2,QNE6,QNE8 QNE9,QNR2,QNR6,QSC2,QTR2,QWA2,QWA4,QWC4,QWH2,QWT2,QXB,QXB7 QXB9,QXC4,QXC6,QXC9,QXE4,QXE6,QXE7,QXE8,QXE9,QXEB,QXH9,QXQ4 QXQ7,QXS4,QXU,SCK4,SM32,SM34,SMD3,SMEO,SME6,SMX2,SMX4,SNC,STC4 SWA4,SXB,SXB7,SXB9,SXE4,SXE7,SXE8,SXE9,SXEB,SXQ4,SXU,VA2,VAA1 VAA8,VAC2,VAG2,VC2,VC2N,VCN2,VD2,VDB2,VDE2,VE39,VEP7,VEP9,VK2 VKB2,VKE4,VKE9,VKX4,VKX9,VM2,VMA2,VME2,VMS2,VN17,VN27,VNG1 VNG2,VNS9,VPE4,VPE5,VPE7,VPE9,VPX4,VPX5,VPX7,VPX9,VS39,VS49 VSD,VSD4,VSD7,VSD9,VTH4,VWA2,VWC,VWC7,VWC9,VWE,VWS,VWT4,VX39 VX8,VXB,VXB7,VXB9,VXE2,VXE4,VXE6,VXE7,VXE8,VXE9,VXEB,VXG,VXG2 VXP7,VXQ4
13	94109-12000	WASHER, DRAIN PLUG, 12MM ····	2	2	2	2		
14	94251-10000	PIN, LOCK, 10MM ·····	1	1	1	1		
15	95701-06012-00	BOLT, FLANGE, 6X12 ·····	2	2	2	2	-------- --------	ED6,EDD2,EDS2,EDS6,EDT6,EN6,ENT2,HA2,HJA2,LKE,LX2,LXE2,LXE4 LXE8,LXQ4,LXU,PA2,PAE2,PXE8,PXM8,PXU,PXU4,QA2,QA26,QAA2,QAE2 QAE6,QAW,QC2,QDW9,QK4,QKA4,QKB2,QMEO,QNB2,QND,QNE2,QNE6,QNE8 QNE9,QNR2,QNR6,QSC2,QTR2,QWA2,QWA4,QWC4,QWH2,QWT2,QXB,QXB7 QXB9,QXC4,QXC6,QXC9,QXE4,QXE6,QXE7,QXE8,QXE9,QXEB,QXH9,QXQ4 QXQ7,QXS4,QXU,SCK4,SM32,SM34,SMD3,SMEO,SME6,SMX2,SMX4,SNC,STC4 SWA4,SXB,SXB7,SXB9,SXE4,SXE7,SXE8,SXE9,SXEB,SXQ4,SXU,VA2,VAA1 VAA8,VAC2,VAG2,VC2,VC2N,VCN2,VD2,VDB2,VDE2,VE39,VEP7,VEP9,VK2 VKB2,VKE4,VKE9,VKX4,VKX9,VM2,VMA2,VME2,VMS2,VN17,VN27,VNG1 VNG2,VNS9,VPE4,VPE5,VPE7,VPE9,VPX4,VPX5,VPX7,VPX9,VS39,VS49 VSD,VSD4,VSD7,VSD9,VTH4,VWA2,VWC,VWC7,VWC9,VWE,VWS,VWT4,VX39 VX8,VXB,VXB7,VXB9,VXE2,VXE4,VXE6,VXE7,VXE8,VXE9,VXEB,VXG,VXG2 VXP7,VXQ4
16	96100-62020-00	BEARING, RADIAL BALL, 6202 ··	1	1	1	1		
17	31161-ZE2-000	CORD, EARTH ·····	1	1	-	1	-------- --------	VWS

CRANKCASE COVER(1)

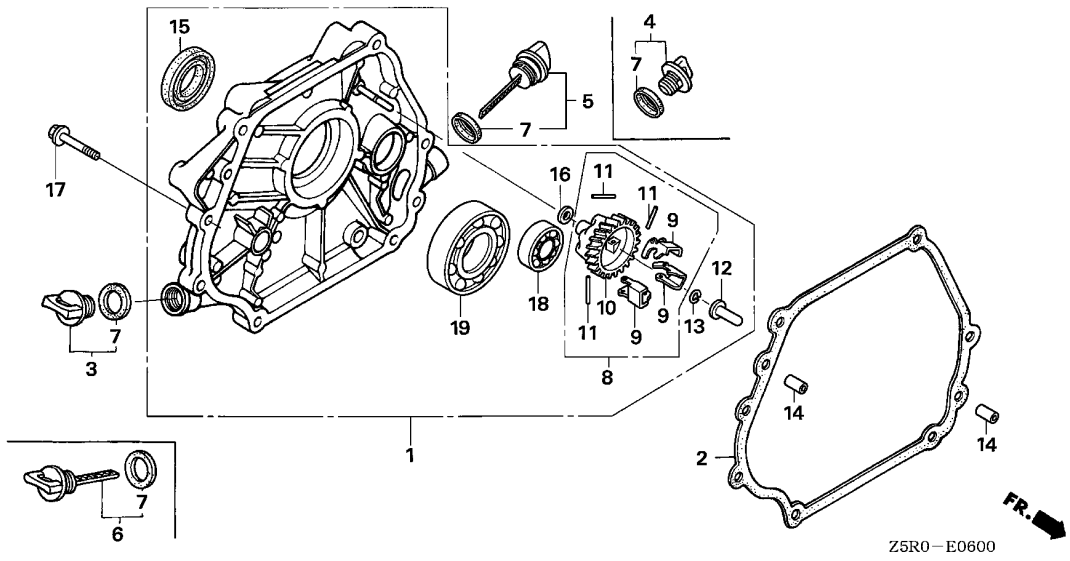

Ref. No.	L.O.N.	(Relative ref. Number) Description	F.R.T.

Ref. No.	Part No.	Description	Reqd. QTY GX 390 U1	GX 390 R1	GX 390 U2	GX 390 R2	Serial No.		Parts catalogue code
1	11300-ZE3-040	COVER ASSY., CRANKCASE ------	1	1	1	1	--------	--------	ED6,EDD2,EDS2,EDS6,EDT6,EN6,ENT2,SCK4,SHQ4,SM32,SM34,SMC1,SMD3 SMEO,SME6,STC4,SWA4,SXB,SXB7,SXB9,SXE4,SXE7,SXE8,SXE9,SXEB SXQ4,SXU
	11300-ZE3-604	----------	1	1	1	1	--------	--------	PA2,PAE2,PXE8,PXM8,PXU,PXU4,QA2,QA26,QAA2,QAE2,QAE6,QAW,QC2 QDW9,QE,QHB4,QK4,QKA4,QKB2,QMEO,QNB2,QND,QNE2,QNE6,QNE8,QNE9 QNK,QNR2,QNR6,QSC2,QTR2,QWA2,QWA4,QWC4,QWH2,QWT2,QXB,QXB7,QXB9 QXC4,QXC6,QXC9,QXE4,QXE6,QXE7,QXE8,QXE9,QXEB,QXH9,QXQ4,QXQ7 QXS4,QXU,SNC,VA2,VAA1,VAA8,VAC2,VAG2,VC2,VC2N,VCN2,VD2,VDB2 VDE2,VE39,VEP7,VEP9,VK2,VKB2,VKE4,VKE9,VKX4,VKX9,VM2,VMA2,VME2 VMS2,VN17,VN27,VNG1,VNG2,VNS9,VPE4,VPE5,VPE7,VPE9,VPX4,VPX5 VPX7,VPX9,VS39,VS49,VSD,VSD4,VSD7,VSD9,VTH4,VWA2,VWC,VWC7,VWC9 VWE,VWT4,VX39,VX8,VXB,VXB7,VXB9,VXE2,VXE4,VXE6,VXE7,VXE8,VXE9 VXEB,VXG,VXG2,VXP7,VXQ4
	11300-ZE3-P70	----------	1	1	-	1	--------	--------	SMX4,VWS
	11300-ZE3-040	----------	1	-	-	-	--------	1626573	SMX2
	11300-ZE3-P70	----------	1	-	-	-	1626574	--------	SMX2
			-	-	1	-	--------	--------	SMX2
2	11381-ZE3-801	PACKING, CASE COVER ---------	1	1	-	-	--------	--------	ED6,EDD2,EDS2,EDS6,EDT6,EN6,ENT2,PA2,PAE2,PXE8,PXM8,PXU,PXU4 QA2,QA26,QAA2,QAE2,QAE6,QAW,QC2,QDW9,QE,QHB4,QK4,QKA4,QKB2 QMEO,QNB2,QND,QNE2,QNE6,QNE8,QNE9,QNK,QNR2,QNR6,QSC2,QTR2,QWA2 QWA4,QWC4,QWH2,QWT2,QXB,QXB7,QXB9,QXC4,QXC6,QXC9,QXE4,QXE6 QXE7,QXE8,QXE9,QXEB,QXH9,QXQ4,QXQ7,QXS4,QXU,SCK4,SHQ4,SM32 SM34,SMC1,SMD3,SMEO,SME6,SMX2,SMX4,SNC,STC4,SWA4,SXB,SXB7,SXB9 SXE4,SXE7,SXE8,SXE9,SXEB,SXQ4,SXU,VA2,VAA1,VAA8,VAC2,VAG2,VC2 VC2N,VCN2,VD2,VDB2,VDE2,VE39,VEP7,VEP9,VK2,VKB2,VKE4,VKE9,VKX4 VKX9,VM2,VMA2,VME2,VMS2,VN17,VN27,VNG1,VNG2,VNS9,VPE4,VPE5 VPE7,VPE9,VPX4,VPX5,VPX7,VPX9,VS39,VS49,VSD,VSD4,VSD7,VSD9 VTH4,VWA2,VWC,VWC7,VWC9,VWE,VWS,VWT4,VX39,VX8,VXB,VXB7,VXB9 VXE2,VXE4,VXE6,VXE7,VXE8,VXE9,VXEB,VXG,VXG2,VXP7,VXQ4

CRANKCASE COVER(1)

Ref. No.	Part No.	Description	Reqd. QTY GX 390 U1	GX 390 R1	GX 390 U2	GX 390 R2	Serial No.		Parts catalogue code
(2)	11381-Z5T-000	PACKING, CASE COVER ·····	-	-	1	1			
3	15600-ZG4-003	CAP ASSY., OIL FILLER ·····	1	1	1	1	--------	--------	ED6,EDD2,EDS2,EDS6,EDT6,EN6,ENT2,PA2,PAE2,PXE8,PXM8,PXU,PXU4 QA2,QA26,QAA2,QAE2,QAE6,QAW,QC2,QDW9,QE,QHB4,QK4,QKA4,QKB2 QME0,QNB2,QND,QNE2,QNE6,QNE8,QNE9,QNK,QNR2,QNR6,QSC2,QTR2,QWA2 QWA4,QWC4,QWH2,QWT2,QXB,QXB7,QXB9,QXC4,QXC6,QXC9,QXE4,QXE6 QXE7,QXE8,QXE9,QXEB,QXH9,QXQ4,QXQ7,QXS4,QXU,SCK4,SHQ4,SM32 SM34,SMC1,SMD3,SME0,SME6,SMX2,SMX4,SNC,STC4,SWA4,SXB,SXB7,SXB9 SXE4,SXE7,SXE8,SXE9,SXEB,SXQ4,SXU,VA2,VAA1,VAA8,VAC2,VAG2,VC2 VC2N,VCN2,VD2,VDB2,VDE2,VE39,VEP7,VEP9,VK2,VKB2,VKX4,VKX9,VM2 VMA2,VME2,VMS2,VN17,VN27,VNG1,VNG2,VNS9,VPE4,VPE5,VPE7,VPE9 VPX4,VPX5,VPX7,VPX9,VS39,VS49,VSD,VSD4,VSD7,VSD9,VTH4,VWA2,VWC VWC7,VWC9,VWE,VWS,VWT4,VX39,VX8,VXB,VXB7,VXB9,VXE2,VXE4,VXE6 VXE7,VXE8,VXE9,VXEB,VXG,VXG2,VXP7,VXQ4
4	15600-ZG4-003	CAP ASSY., OIL FILLER ·····	1	1	-	-	--------	--------	VS49,VSD4,VTH4
5	15600-735-003	CAP ASSY., OIL FILLER ·····	1	1	1	1	--------	--------	ED6,EDD2,EDS2,EDS6,EDT6,EN6,ENT2,PA2,PAE2,PXE8,PXM8,PXU,PXU4 QA2,QA26,QAA2,QAE2,QAE6,QAW,QC2,QDW9,QE,QHB4,QK4,QKA4,QKB2 QME0,QNB2,QND,QNE2,QNE6,QNE8,QNE9,QNK,QNR2,QNR6,QSC2,QTR2,QWA2 QWA4,QWC4,QWH2,QWT2,QXB,QXB7,QXB9,QXC4,QXC6,QXC9,QXE4,QXE6 QXE7,QXE8,QXE9,QXEB,QXH9,QXQ4,QXQ7,QXS4,QXU,SCK4,SHQ4,SM32 SM34,SMC1,SMD3,SME0,SME6,SMX2,SMX4,SNC,STC4,SWA4,SXB,SXB7,SXB9 SXE4,SXE7,SXE8,SXE9,SXEB,SXQ4,SXU,VA2,VAA1,VAA8,VAC2,VAG2,VC2 VC2N,VCN2,VD2,VDB2,VDE2,VE39,VEP7,VEP9,VK2,VKB2,VKE4,VKE9,VKX4 VKX9,VM2,VMA2,VME2,VMS2,VN17,VN27,VNG1,VNG2,VNS9,VPE4,VPE5 VPE7,VPE9,VPX4,VPX5,VPX7,VPX9,VS39,VSD,VSD7,VSD9,VWA2,VWC,VWC7 VWC9,VWE,VWS,VWT4,VX39,VX8,VXB,VXB7,VXB9,VXE2,VXE4,VXE6,VXE7 VXE8,VXE9,VXEB,VXG,VXG2,VXP7,VXQ4
6	15600-735-003	CAP ASSY., OIL FILLER ·····	1	1	-	-	--------	--------	VKE4,VKE9
7	15625-ZE1-003	PACKING, OIL FILLER CAP ·····	2	2	2	2	--------	--------	ED6,EDD2,EDS2,EDS6,EDT6,EN6,ENT2,PA2,PAE2,PXE8,PXM8,PXU,PXU4 QA2,QA26,QAA2,QAE2,QAE6,QAW,QC2,QDW9,QE,QHB4,QK4,QKA4,QKB2 QME0,QNB2,QND,QNE2,QNE6,QNE8,QNE9,QNK,QNR2,QNR6,QSC2,QTR2,QWA2 QWA4,QWC4,QWH2,QWT2,QXB,QXB7,QXB9,QXC4,QXC6,QXC9,QXE4,QXE6 QXE7,QXE8,QXE9,QXEB,QXH9,QXQ4,QXQ7,QXS4,QXU,SCK4,SHQ4,SM32 SM34,SMC1,SMD3,SME0,SME6,SMX2,SMX4,SNC,STC4,SWA4,SXB,SXB7,SXB9 SXE4,SXE7,SXE8,SXE9,SXEB,SXQ4,SXU,VA2,VAA1,VAA8,VAC2,VAG2,VC2 VC2N,VCN2,VD2,VDB2,VDE2,VE39,VEP7,VEP9,VK2,VKB2,VKE4,VKE9,VKX4 VKX9,VM2,VMA2,VME2,VMS2,VN17,VN27,VNG1,VNG2,VNS9,VPE4,VPE5 VPE7,VPE9,VPX4,VPX5,VPX7,VPX9,VS39,VS49,VSD,VSD4,VSD7,VSD9 VTH4,VWA2,VWC,VWC7,VWC9,VWE,VWS,VWT4,VX39,VX8,VXB,VXB7,VXB9 VXE2,VXE4,VXE6,VXE7,VXE8,VXE9,VXEB,VXG,VXG2,VXP7,VXQ4
8	16510-ZE3-000	GOVERNOR ASSY. ·····	1	1	1	1	--------	--------	ED6,EDD2,EDS2,EDS6,EDT6,EN6,ENT2,PA2,PAE2,PXE8,PXM8,PXU,PXU4 QA2,QA26,QAA2,QAE2,QAE6,QAW,QC2,QDW9,QE,QHB4,QK4,QKA4,QKB2 QME0,QNB2,QND,QNE2,QNE6,QNE8,QNE9,QNK,QNR2,QNR6,QSC2,QTR2,QWA2 QWA4,QWC4,QWH2,QWT2,QXB,QXB7,QXB9,QXC4,QXC6,QXC9,QXE4,QXE6 QXE7,QXE8,QXE9,QXEB,QXH9,QXQ4,QXQ7,QXS4,QXU,SCK4,SHQ4,SM32 SM34,SMC1,SMD3,SME0,SME6,SMX2,SMX4,SNC,STC4,SWA4,SXB,SXB7,SXB9 SXE4,SXE7,SXE8,SXE9,SXEB,SXQ4,SXU,VA2,VAA1,VAA8,VAC2,VAG2,VC2 VC2N,VCN2,VD2,VDB2,VDE2,VE39,VEP7,VEP9,VK2,VKB2,VKE4,VKE9,VKX4 VKX9,VM2,VMA2,VME2,VMS2,VN17,VN27,VNG1,VNG2,VNS9,VPE4,VPE5 VPE7,VPE9,VPX4,VPX5,VPX7,VPX9,VS39,VS49,VSD,VSD4,VSD7,VSD9 VTH4,VWA2,VWC,VWC7,VWC9,VWE,VWS,VWT4,VX39,VX8,VXB,VXB7,VXB9 VXE2,VXE4,VXE6,VXE7,VXE8,VXE9,VXEB,VXG,VXG2,VXP7,VXQ4

CRANKCASE COVER(1)

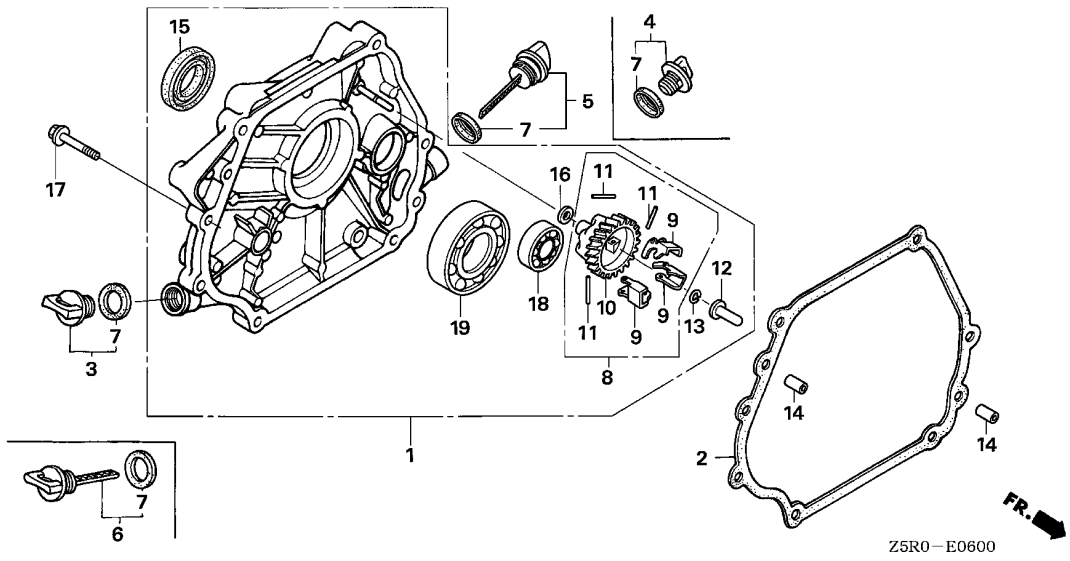

Ref. No.	Part No.	Description	Reqd. QTY GX 390 U1	GX 390 R1	GX 390 U2	GX 390 R2	Serial No.		Parts catalogue code
9	16511-ZE8-000	WEIGHT, GOVERNOR ·····	3	3	3	3	--------	--------	ED6,EDD2,EDS2,EDS6,EDT6,EN6,ENT2,PA2,PAE2,PXE8,PXM8,PXU,PXU4 QA2,QA26,QAA2,QAE2,QAE6,QAW,QC2,QDW9,QE,QHB4,QK4,QKA4,QKB2 QMEO,QNB2,QND,QNE2,QNE6,QNE8,QNE9,QNK,QNR2,QNR6,QSC2,QTR2,QWA2 QWA4,QWC4,QWH2,QWT2,QXB,QXB7,QXB9,QXC4,QXC6,QXC9,QXE4,QXE6 QXE7,QXE8,QXE9,QXEB,QXH9,QXQ4,QXQ7,QXS4,QXU,SCK4,SHQ4,SM32 SM34,SMC1,SMD3,SMEO,SME6,SMX2,SMX4,SNC,STC4,SWA4,SXB,SXB7,SXB9 SXE4,SXE7,SXE8,SXE9,SXEB,SXQ4,SXU,VA2,VAA1,VAA8,VAC2,VAG2,VC2 VC2N,VCN2,VD2,VDB2,VDE2,VE39,VEP7,VEP9,VK2,VKB2,VKE4,VKE9,VKX4 VKX9,VM2,VMA2,VME2,VMS2,VN17,VN27,VNG1,VNG2,VNS9,VPE4,VPE5 VPE7,VPE9,VPX4,VPX5,VPX7,VPX9,VS39,VS49,VSD,VSD4,VSD7,VSD9 VTH4,VWA2,VWC,VWC7,VWC9,VWE,VWS,VWT4,VX39,VX8,VXB,VXB7,VXB9 VXE2,VXE4,VXE6,VXE7,VXE8,VXE9,VXEB,VXG,VXG2,VXP7,VXQ4
10	16512-ZE3-000	HOLDER, GOVERNOR WEIGHT ·····	1	1	1	1	--------	--------	ED6,EDD2,EDS2,EDS6,EDT6,EN6,ENT2,PA2,PAE2,PXE8,PXM8,PXU,PXU4 QA2,QA26,QAA2,QAE2,QAE6,QAW,QC2,QDW9,QE,QHB4,QK4,QKA4,QKB2 QMEO,QNB2,QND,QNE2,QNE6,QNE8,QNE9,QNK,QNR2,QNR6,QSC2,QTR2,QWA2 QWA4,QWC4,QWH2,QWT2,QXB,QXB7,QXB9,QXC4,QXC6,QXC9,QXE4,QXE6 QXE7,QXE8,QXE9,QXEB,QXH9,QXQ4,QXQ7,QXS4,QXU,SCK4,SHQ4,SM32 SM34,SMC1,SMD3,SMEO,SME6,SMX2,SMX4,SNC,STC4,SWA4,SXB,SXB7,SXB9 SXE4,SXE7,SXE8,SXE9,SXEB,SXQ4,SXU,VA2,VAA1,VAA8,VAC2,VAG2,VC2 VC2N,VCN2,VD2,VDB2,VDE2,VE39,VEP7,VEP9,VK2,VKB2,VKE4,VKE9,VKX4 VKX9,VM2,VMA2,VME2,VMS2,VN17,VN27,VNG1,VNG2,VNS9,VPE4,VPE5 VPE7,VPE9,VPX4,VPX5,VPX7,VPX9,VS39,VS49,VSD,VSD4,VSD7,VSD9 VTH4,VWA2,VWC,VWC7,VWC9,VWE,VWS,VWT4,VX39,VX8,VXB,VXB7,VXB9 VXE2,VXE4,VXE6,VXE7,VXE8,VXE9,VXEB,VXG,VXG2,VXP7,VXQ4

CRANKCASE COVER(1)

Ref. No.	Part No.	Description	Reqd. QTY GX 390 U1	GX 390 R1	GX 390 U2	GX 390 R2	Serial No.		Parts catalogue code
11	16513-ZE2-000	PIN, GOVERNOR WEIGHT	3	3	3	3	--------	--------	ED6,EDD2,EDS2,EDS6,EDT6,EN6,ENT2,PA2,PAE2,PXE8,PXM8,PXU,PXU4 QA2,QA26,QAA2,QAE2,QAE6,QAW,QC2,QDW9,QE,QHB4,QK4,QKA4,QKB2 QMEO,QNB2,QND,QNE2,QNE6,QNE8,QNE9,QNK,QNR2,QNR6,QSC2,QTR2,QWA2 QWA4,QWC4,QWH2,QWT2,QXB,QXB7,QXB9,QXC4,QXC6,QXC9,QXE4,QXE6 QXE7,QXE8,QXE9,QXEB,QXH9,QXQ4,QXQ7,QXS4,QXU,SCK4,SHQ4,SM32 SM34,SMC1,SMD3,SMEO,SME6,SMX2,SMX4,SNC,STC4,SWA4,SXB,SXB7,SXB9 SXE4,SXE7,SXE8,SXE9,SXEB,SXQ4,SXU,VA2,VAA1,VAA8,VAC2,VAG2,VC2 VC2N,VCN2,VD2,VDB2,VDE2,VE39,VEP7,VEP9,VK2,VKB2,VKE4,VKE9,VKX4 VKX9,VM2,VMA2,VME2,VMS2,VN17,VN27,VNG1,VNG2,VNS9,VPE4,VPE5 VPE7,VPE9,VPX4,VPX5,VPX7,VPX9,VS39,VS49,VSD,VSD4,VSD7,VSD9 VTH4,VWA2,VWC,VWC7,VWC9,VWE,VWS,VWT4,VX39,VX8,VXB,VXB7,VXB9 VXE2,VXE4,VXE6,VXE7,VXE8,VXE9,VXEB,VXG,VXG2,VXP7,VXQ4
12	16531-ZOA-000	SLIDER, GOVERNOR	1	1	1	1	--------	--------	ED6,EDD2,EDS2,EDS6,EDT6,EN6,ENT2,PA2,PAE2,PXE8,PXM8,PXU,PXU4 QA2,QA26,QAA2,QAE2,QAE6,QAW,QC2,QDW9,QE,QHB4,QK4,QKA4,QKB2 QMEO,QNB2,QND,QNE2,QNE6,QNE8,QNE9,QNK,QNR2,QNR6,QSC2,QTR2,QWA2 QWA4,QWC4,QWH2,QWT2,QXB,QXB7,QXB9,QXC4,QXC6,QXC9,QXE4,QXE6 QXE7,QXE8,QXE9,QXEB,QXH9,QXQ4,QXQ7,QXS4,QXU,SCK4,SHQ4,SM32 SM34,SMC1,SMD3,SMEO,SME6,SMX2,SMX4,SNC,STC4,SWA4,SXB,SXB7,SXB9 SXE4,SXE7,SXE8,SXE9,SXEB,SXQ4,SXU,VA2,VAA1,VAA8,VAC2,VAG2,VC2 VC2N,VCN2,VD2,VDB2,VDE2,VE39,VEP7,VEP9,VK2,VKB2,VKE4,VKE9,VKX4 VKX9,VM2,VMA2,VME2,VMS2,VN17,VN27,VNG1,VNG2,VNS9,VPE4,VPE5 VPE7,VPE9,VPX4,VPX5,VPX7,VPX9,VS39,VS49,VSD,VSD4,VSD7,VSD9 VTH4,VWA2,VWC,VWC7,VWC9,VWE,VWS,VWT4,VX39,VX8,VXB,VXB7,VXB9 VXE2,VXE4,VXE6,VXE7,VXE8,VXE9,VXEB,VXG,VXG2,VXP7,VXQ4
13	90602-ZE1-000	CLIP, GOVERNOR HOLDER	1	1	1	1	--------	--------	ED6,EDD2,EDS2,EDS6,EDT6,EN6,ENT2,PA2,PAE2,PXE8,PXM8,PXU,PXU4 QA2,QA26,QAA2,QAE2,QAE6,QAW,QC2,QDW9,QE,QHB4,QK4,QKA4,QKB2 QMEO,QNB2,QND,QNE2,QNE6,QNE8,QNE9,QNK,QNR2,QNR6,QSC2,QTR2,QWA2 QWA4,QWC4,QWH2,QWT2,QXB,QXB7,QXB9,QXC4,QXC6,QXC9,QXE4,QXE6 QXE7,QXE8,QXE9,QXEB,QXH9,QXQ4,QXQ7,QXS4,QXU,SCK4,SHQ4,SM32 SM34,SMC1,SMD3,SMEO,SME6,SMX2,SMX4,SNC,STC4,SWA4,SXB,SXB7,SXB9 SXE4,SXE7,SXE8,SXE9,SXEB,SXQ4,SXU,VA2,VAA1,VAA8,VAC2,VAG2,VC2 VC2N,VCN2,VD2,VDB2,VDE2,VE39,VEP7,VEP9,VK2,VKB2,VKE4,VKE9,VKX4 VKX9,VM2,VMA2,VME2,VMS2,VN17,VN27,VNG1,VNG2,VNS9,VPE4,VPE5 VPE7,VPE9,VPX4,VPX5,VPX7,VPX9,VS39,VS49,VSD,VSD4,VSD7,VSD9 VTH4,VWA2,VWC,VWC7,VWC9,VWE,VWS,VWT4,VX39,VX8,VXB,VXB7,VXB9 VXE2,VXE4,VXE6,VXE7,VXE8,VXE9,VXEB,VXG,VXG2,VXP7,VXQ4
14	90701-HC4-000	DOWEL PIN, 8X12	2	2	2	2	--------	--------	ED6,EDD2,EDS2,EDS6,EDT6,EN6,ENT2,PA2,PAE2,PXE8,PXM8,PXU,PXU4 QA2,QA26,QAA2,QAE2,QAE6,QAW,QC2,QDW9,QE,QHB4,QK4,QKA4,QKB2 QMEO,QNB2,QND,QNE2,QNE6,QNE8,QNE9,QNK,QNR2,QNR6,QSC2,QTR2,QWA2 QWA4,QWC4,QWH2,QWT2,QXB,QXB7,QXB9,QXC4,QXC6,QXC9,QXE4,QXE6 QXE7,QXE8,QXE9,QXEB,QXH9,QXQ4,QXQ7,QXS4,QXU,SCK4,SHQ4,SM32 SM34,SMC1,SMD3,SMEO,SME6,SMX2,SMX4,SNC,STC4,SWA4,SXB,SXB7,SXB9 SXE4,SXE7,SXE8,SXE9,SXEB,SXQ4,SXU,VA2,VAA1,VAA8,VAC2,VAG2,VC2 VC2N,VCN2,VD2,VDB2,VDE2,VE39,VEP7,VEP9,VK2,VKB2,VKE4,VKE9,VKX4 VKX9,VM2,VMA2,VME2,VMS2,VN17,VN27,VNG1,VNG2,VNS9,VPE4,VPE5 VPE7,VPE9,VPX4,VPX5,VPX7,VPX9,VS39,VS49,VSD,VSD4,VSD7,VSD9 VTH4,VWA2,VWC,VWC7,VWC9,VWE,VWS,VWT4,VX39,VX8,VXB,VXB7,VXB9 VXE2,VXE4,VXE6,VXE7,VXE8,VXE9,VXEB,VXG,VXG2,VXP7,VXQ4

CRANKCASE COVER(1)

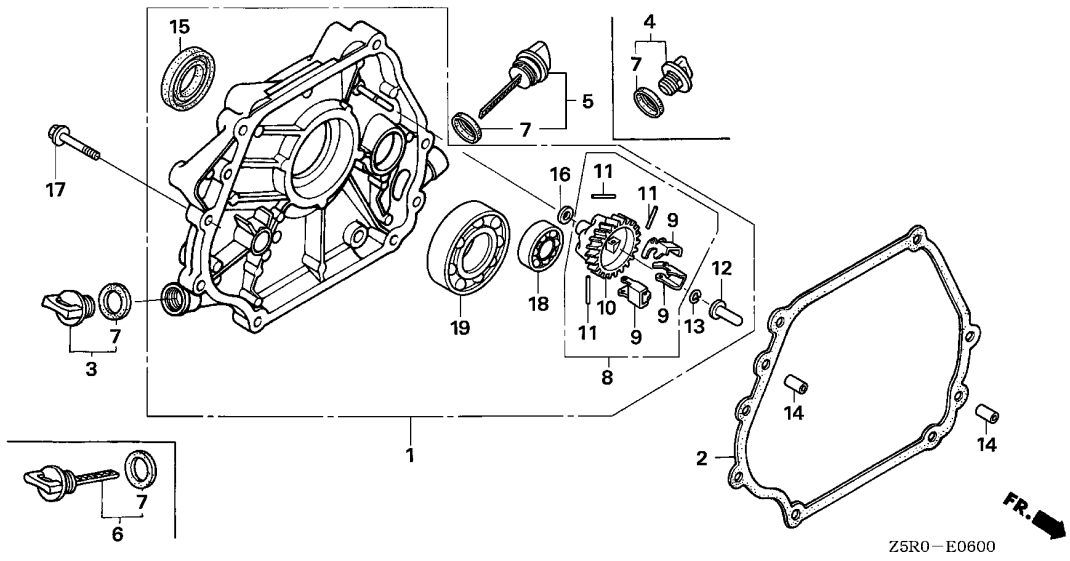

Ref. No.	Part No.	Description	Reqd. QTY GX 390 U1	GX 390 R1	GX 390 U2	GX 390 R2	Serial No.	Parts catalogue code
15	91201-ZE3-004	OIL SEAL, 35X52X8 ----------	1	1	1	1	-------- --------	ED6,EDD2,EDS2,EDS6,EDT6,EN6,ENT2,PA2,PAE2,PXE8,PXM8,PXU,PXU4 QA2,QA26,QAA2,QAE2,QAE6,QAW,QC2,QDW9,QE,QHB4,QK4,QKA4,QKB2 QMEO,QNB2,QND,QNE2,QNE6,QNE8,QNE9,QNK,QNR2,QNR6,QSC2,QTR2,QWA2 QWA4,QWC4,QWH2,QWT2,QXB,QXB7,QXB9,QXC4,QXC6,QXC9,QXE4,QXE6 QXE7,QXE8,QXE9,QXEB,QXH9,QXQ4,QXQ7,QXS4,QXU,SCK4,SHQ4,SM32 SM34,SMC1,SMD3,SMEO,SME6,SMX2,SMX4,SNC,STC4,SWA4,SXB,SXB7,SXB9 SXE4,SXE7,SXE8,SXE9,SXEB,SXQ4,SXU,VA2,VAA1,VAA8,VAC2,VAG2,VC2 VC2N,VCN2,VD2,VDB2,VDE2,VE39,VEP7,VEP9,VK2,VKB2,VKE4,VKE9,VKX4 VKX9,VM2,VMA2,VME2,VMS2,VN17,VN27,VNG1,VNG2,VNS9,VPE4,VPE5 VPE7,VPE9,VPX4,VPX5,VPX7,VPX9,VS39,VS49,VSD,VSD4,VSD7,VSD9 VTH4,VWA2,VWC,VWC7,VWC9,VWE,VWS,VWT4,VX39,VX8,VXB,VXB7,VXB9 VXE2,VXE4,VXE6,VXE7,VXE8,VXE9,VXEB,VXG,VXG2,VXP7,VXQ4
16	94101-06800	WASHER, PLAIN, 6MM ----------	1	1	1	1	-------- --------	ED6,EDD2,EDS2,EDS6,EDT6,EN6,ENT2,PA2,PAE2,PXE8,PXM8,PXU,PXU4 QA2,QA26,QAA2,QAE2,QAE6,QAW,QC2,QDW9,QE,QHB4,QK4,QKA4,QKB2 QMEO,QNB2,QND,QNE2,QNE6,QNE8,QNE9,QNK,QNR2,QNR6,QSC2,QTR2,QWA2 QWA4,QWC4,QWH2,QWT2,QXB,QXB7,QXB9,QXC4,QXC6,QXC9,QXE4,QXE6 QXE7,QXE8,QXE9,QXEB,QXH9,QXQ4,QXQ7,QXS4,QXU,SCK4,SHQ4,SM32 SM34,SMC1,SMD3,SMEO,SME6,SMX2,SMX4,SNC,STC4,SWA4,SXB,SXB7,SXB9 SXE4,SXE7,SXE8,SXE9,SXEB,SXQ4,SXU,VA2,VAA1,VAA8,VAC2,VAG2,VC2 VC2N,VCN2,VD2,VDB2,VDE2,VE39,VEP7,VEP9,VK2,VKB2,VKE4,VKE9,VKX4 VKX9,VM2,VMA2,VME2,VMS2,VN17,VN27,VNG1,VNG2,VNS9,VPE4,VPE5 VPE7,VPE9,VPX4,VPX5,VPX7,VPX9,VS39,VS49,VSD,VSD4,VSD7,VSD9 VTH4,VWA2,VWC,VWC7,VWC9,VWE,VWS,VWT4,VX39,VX8,VXB,VXB7,VXB9 VXE2,VXE4,VXE6,VXE7,VXE8,VXE9,VXEB,VXG,VXG2,VXP7,VXQ4

CRANKCASE COVER(1)

Ref. No.	Part No.	Description	Reqd. QTY GX 390 U1	GX 390 R1	GX 390 U2	GX 390 R2	Serial No.		Parts catalogue code
17	95701-08040-00	BOLT, FLANGE, 8X40 ·····	7	7	7	7	--------	--------	ED6,EDD2,EDS2,EDS6,EDT6,EN6,ENT2,PA2,PAE2,PXE8,PXM8,PXU,PXU4 QA2,QA26,QAA2,QAE2,QAE6,QAW,QC2,QDW9,QE,QHB4,QK4,QKA4,QKB2 QMEO,QNB2,QND,QNE2,QNE6,QNE8,QNE9,QNK,QNR2,QNR6,QSC2,QTR2,QWA2 QWA4,QWC4,QWH2,QWT2,QXB,QXB7,QXB9,QXC4,QXC6,QXC9,QXE4,QXE6 QXE7,QXE8,QXE9,QXEB,QXH9,QXQ4,QXQ7,QXS4,QXU,SCK4,SHQ4,SM32 SM34,SMC1,SMD3,SMEO,SME6,SMX2,SMX4,SNC,STC4,SWA4,SXB,SXB7,SXB9 SXE4,SXE7,SXE8,SXE9,SXEB,SXQ4,SXU,VA2,VAA1,VAA8,VAC2,VAG2,VC2 VC2N,VCN2,VD2,VDB2,VDE2,VE39,VEP7,VEP9,VK2,VKB2,VKE4,VKE9,VKX4 VKX9,VM2,VMA2,VME2,VMS2,VN17,VN27,VNG1,VNG2,VNS9,VPE4,VPE5 VPE7,VPE9,VPX4,VPX5,VPX7,VPX9,VS39,VS49,VSD,VSD4,VSD7,VSD9 VTH4,VWA2,VWC,VWC7,VWC9,VWE,VWS,VWT4,VX39,VX8,VXB,VXB7,VXB9 VXE2,VXE4,VXE6,VXE7,VXE8,VXE9,VXEB,VXG,VXG2,VXP7,VXQ4
18	96100-62020-00	BEARING, RADIAL BALL, 6202 ··	1	1	1	1	--------	--------	ED6,EDD2,EDS2,EDS6,EDT6,EN6,ENT2,PA2,PAE2,PXE8,PXM8,PXU,PXU4 QA2,QA26,QAA2,QAE2,QAE6,QAW,QC2,QDW9,QE,QHB4,QK4,QKA4,QKB2 QMEO,QNB2,QND,QNE2,QNE6,QNE8,QNE9,QNK,QNR2,QNR6,QSC2,QTR2,QWA2 QWA4,QWC4,QWH2,QWT2,QXB,QXB7,QXB9,QXC4,QXC6,QXC9,QXE4,QXE6 QXE7,QXE8,QXE9,QXEB,QXH9,QXQ4,QXQ7,QXS4,QXU,SCK4,SHQ4,SM32 SM34,SMC1,SMD3,SMEO,SME6,SMX2,SMX4,SNC,STC4,SWA4,SXB,SXB7,SXB9 SXE4,SXE7,SXE8,SXE9,SXEB,SXQ4,SXU,VA2,VAA1,VAA8,VAC2,VAG2,VC2 VC2N,VCN2,VD2,VDB2,VDE2,VE39,VEP7,VEP9,VK2,VKB2,VKE4,VKE9,VKX4 VKX9,VM2,VMA2,VME2,VMS2,VN17,VN27,VNG1,VNG2,VNS9,VPE4,VPE5 VPE7,VPE9,VPX4,VPX5,VPX7,VPX9,VS39,VS49,VSD,VSD4,VSD7,VSD9 VTH4,VWA2,VWC,VWC7,VWC9,VWE,VWS,VWT4,VX39,VX8,VXB,VXB7,VXB9 VXE2,VXE4,VXE6,VXE7,VXE8,VXE9,VXEB,VXG,VXG2,VXP7,VXQ4
19	96100-62070-00	BEARING, RADIAL BALL, 6207 ··	1	1	1	1	--------	--------	ED6,EDD2,EDS2,EDS6,EDT6,EN6,ENT2,PA2,PAE2,PXE8,PXM8,PXU,PXU4 QA2,QA26,QAA2,QAE2,QAE6,QAW,QC2,QDW9,QE,QHB4,QK4,QKA4,QKB2 QMEO,QNB2,QND,QNE2,QNE6,QNE8,QNE9,QNK,QNR2,QNR6,QSC2,QTR2,QWA2 QWA4,QWC4,QWH2,QWT2,QXB,QXB7,QXB9,QXC4,QXC6,QXC9,QXE4,QXE6 QXE7,QXE8,QXE9,QXEB,QXH9,QXQ4,QXQ7,QXS4,QXU,SCK4,SHQ4,SM32 SM34,SMC1,SMD3,SMEO,SME6,SMX2,SMX4,SNC,STC4,SWA4,SXB,SXB7,SXB9 SXE4,SXE7,SXE8,SXE9,SXEB,SXQ4,SXU,VA2,VAA1,VAA8,VAC2,VAG2,VC2 VC2N,VCN2,VD2,VDB2,VDE2,VE39,VEP7,VEP9,VK2,VKB2,VKE4,VKE9,VKX4 VKX9,VM2,VMA2,VME2,VMS2,VN17,VN27,VNG1,VNG2,VNS9,VPE4,VPE5 VPE7,VPE9,VPX4,VPX5,VPX7,VPX9,VS39,VS49,VSD,VSD4,VSD7,VSD9 VTH4,VWA2,VWC,VWC7,VWC9,VWE,VWS,VWT4,VX39,VX8,VXB,VXB7,VXB9 VXE2,VXE4,VXE6,VXE7,VXE8,VXE9,VXEB,VXG,VXG2,VXP7,VXQ4

CRANKCASE COVER(2)

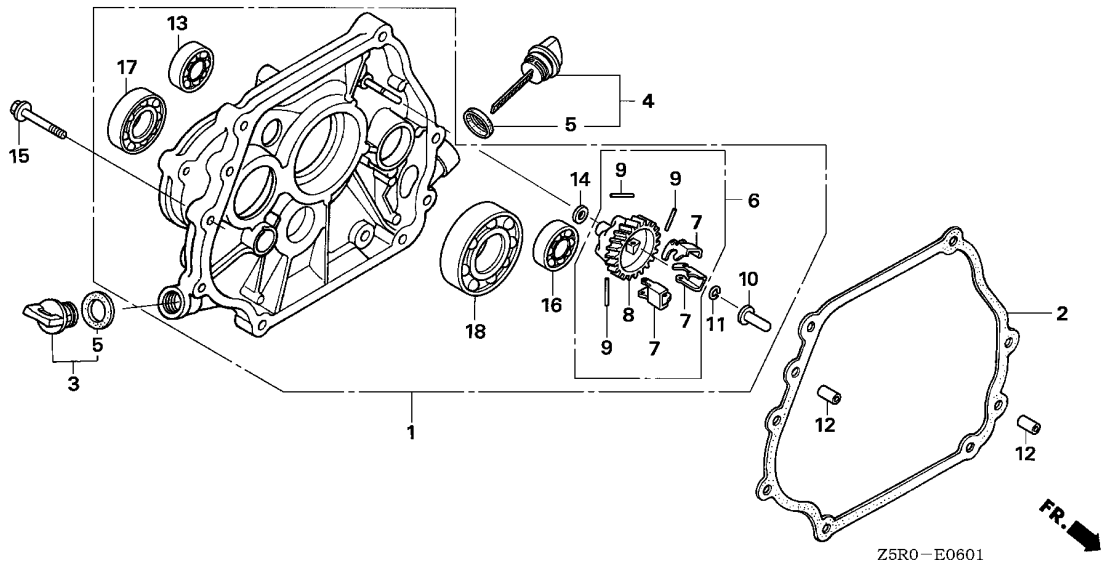

Ref. No.	L.O.N.	(Relative ref. Number) Description	F.R.T.

Ref. No.	Part No.	Description	Reqd. QTY GX 390 U1	GX 390 R1	GX 390 U2	GX 390 R2	Serial No.		Parts catalogue code
1	11300-ZF6-W32	COVER ASSY., CRANKCASE ·····	1	-	-	-	--------	--------	HA2,HJA2
	11300-ZE3-614	·····	1	-	-	-	--------	--------	LKE,LX2,LXE2,LXE4,LXE8,LXQ4,LXU
2	11381-ZE3-801	PACKING, CASE COVER ·····	1	-	-	-	--------	--------	HA2,HJA2,LKE,LX2,LXE2,LXE4,LXE8,LXQ4,LXU
3	15600-ZG4-003	CAP ASSY., OIL FILLER ·····	1	-	-	-	--------	--------	HA2,HJA2,LKE,LX2,LXE2,LXE4,LXE8,LXQ4,LXU
4	15600-735-003	CAP ASSY., OIL FILLER ·····	1	-	-	-	--------	--------	HA2,HJA2,LKE,LX2,LXE2,LXE4,LXE8,LXQ4,LXU
5	15625-ZE1-003	PACKING, OIL FILLER CAP ·····	2	-	-	-	--------	--------	HA2,HJA2,LKE,LX2,LXE2,LXE4,LXE8,LXQ4,LXU
6	16510-ZE3-000	GOVERNOR ASSY. ·····	1	-	-	-	--------	--------	HA2,HJA2,LKE,LX2,LXE2,LXE4,LXE8,LXQ4,LXU
7	16511-ZE8-000	WEIGHT, GOVERNOR ·····	3	-	-	-	--------	--------	HA2,HJA2,LKE,LX2,LXE2,LXE4,LXE8,LXQ4,LXU
8	16512-ZE3-000	HOLDER, GOVERNOR WEIGHT ·····	1	-	-	-	--------	--------	HA2,HJA2,LKE,LX2,LXE2,LXE4,LXE8,LXQ4,LXU
9	16513-ZE2-000	PIN, GOVERNOR WEIGHT ·····	3	-	-	-	--------	--------	HA2,HJA2,LKE,LX2,LXE2,LXE4,LXE8,LXQ4,LXU
10	16531-Z0A-000	SLIDER, GOVERNOR ·····	1	-	-	-	--------	--------	HA2,HJA2,LKE,LX2,LXE2,LXE4,LXE8,LXQ4,LXU
11	90602-ZE1-000	CLIP, GOVERNOR HOLDER ·····	1	-	-	-	--------	--------	HA2,HJA2,LKE,LX2,LXE2,LXE4,LXE8,LXQ4,LXU
12	90701-HC4-000	DOWEL PIN, 8X12 ·····	2	-	-	-	--------	--------	HA2,HJA2,LKE,LX2,LXE2,LXE4,LXE8,LXQ4,LXU
13	91009-KJ1-003	BEARING, RADIAL BALL, 6202 (NTN)	1	-	-	-	--------	--------	HA2,HJA2,LKE,LX2,LXE2,LXE4,LXE8,LXQ4,LXU
14	94101-06800	WASHER, PLAIN, 6MM ·····	1	-	-	-	--------	--------	HA2,HJA2,LKE,LX2,LXE2,LXE4,LXE8,LXQ4,LXU
15	95701-08040-00	BOLT, FLANGE, 8X40 ·····	7	-	-	-	--------	--------	HA2,HJA2,LKE,LX2,LXE2,LXE4,LXE8,LXQ4,LXU
16	96100-62020-00	BEARING, RADIAL BALL, 6202 ··	1	-	-	-	--------	--------	HA2,HJA2,LKE,LX2,LXE2,LXE4,LXE8,LXQ4,LXU
17	91102-GE0-003	BEARING, RADIAL BALL, 6204 (TOYO)	1	-	-	-	--------	--------	HA2,HJA2
	96100-62040-00	BEARING, RADIAL BALL, 6204 ··	1	-	-	-	--------	--------	LKE,LX2,LXE2,LXE4,LXE8,LXQ4,LXU
18	96100-62070-00	BEARING, RADIAL BALL, 6207 ··	1	-	-	-	--------	--------	HA2,HJA2,LKE,LX2,LXE2,LXE4,LXE8,LXQ4,LXU

CRANKSHAFT

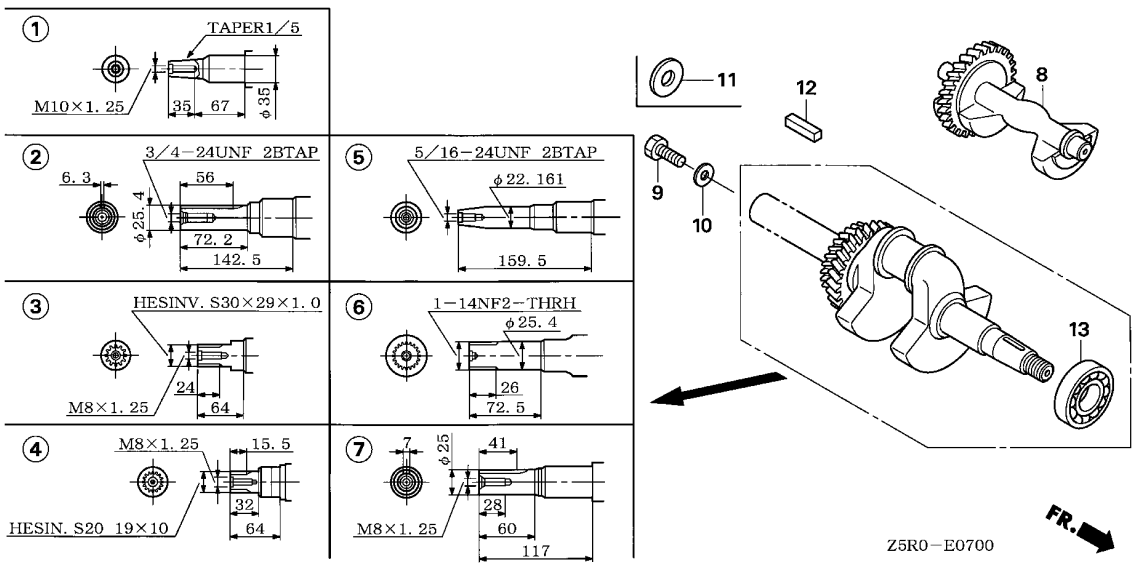

Ref. No.	L.O.N.	(Relative ref. Number) Description	F.R.T.

Ref. No.	Part No.	Description	Reqd. QTY GX 390 U1	GX 390 R1	GX 390 U2	GX 390 R2	Serial No.		Parts catalogue code
1	13310-ZF6-D41	CRANKSHAFT COMP.	1	-	-	-	--------	1114018	ED6,EDD2,EDS2,EDS6,EDT6,EN6,ENT2
	13310-ZF6-D42	.....	1	-	-	-	1114019	--------	ED6,EDD2,EDS2,EDS6,EDT6,EN6,ENT2
			-	1	-	1	--------	--------	ED6,EDD2,EDS2,EDS6,EDT6,EN6,ENT2
2	13310-ZF6-W12	CRANKSHAFT COMP.	1	-	-	-	--------	--------	QHB4,QNB2
	13310-ZF6-W11	.....	1	-	-	-	--------	1113739	QA2,QA26,QAA2,QAE2,QAE6,QAW,QC2,QDW9,QE,QK4,QKA4,QKB2,QMEO,QND QNE2,QNE6,QNE8,QNE9,QNK,QNR2,QNR6,QSC2,QTR2,QWA2,QWA4,QWC4 QWH2,QWT2,QXB,QXC4,QXC6,QXC9,QXE4,QXE6,QXE8,QXEB,QXQ4,QXS4,QXU
	13310-ZF6-W12	.....	1	-	-	-	1113740	--------	QA2,QA26,QAA2,QAE2,QAE6,QAW,QC2,QDW9,QE,QK4,QKA4,QKB2,QMEO,QND QNE2,QNE6,QNE8,QNE9,QNK,QNR2,QNR6,QSC2,QTR2,QWA2,QWA4,QWC4 QWH2,QWT2,QXB,QXC4,QXC6,QXC9,QXE4,QXE6,QXE8,QXEB,QXQ4,QXS4,QXU
			-	1	1	-	--------	--------	QKB2,QNB2,QWA2,QXE8,QXU
3	13310-ZF6-W21	CRANKSHAFT COMP.	1	-	-	-	--------	1113739	LKE,LX2,LXE2,LXE4,LXE8,LXQ4,LXU
	13310-ZF6-W22	.....	1	-	-	-	1113740	--------	LKE,LX2,LXE2,LXE4,LXE8,LXQ4,LXU
4	13310-ZF6-W31	CRANKSHAFT COMP.	1	-	-	-	--------	1121229	HA2,HJA2
	13310-ZF6-W32	.....	1	-	-	-	1121230	--------	HA2,HJA2
5	13310-ZF6-W42	CRANKSHAFT COMP.	1	-	-	1	--------	--------	VC2N,VWS
	13310-ZK6-602	.....	1	-	-	-	--------	--------	QXH9
	13310-ZK6-672	.....	1	-	-	-	--------	--------	VEP9
	13310-ZK6-671	.....	1	-	-	-	--------	1113347	VE39,VEP7,VKE9,VKX9,VN17,VN27,VNS9,VPE7,VPE9,VPX7,VPX9,VS39 VS49,VSD7,VSD9,VWC7,VWC9,VX39,VXB7,VXB9,VXE7,VXE9,VXP7
	13310-ZK6-601	.....	1	-	-	-	--------	1113739	QXB7,QXB9,QXE7,QXE9,QXQ7
	13310-ZF6-W41	.....	1	-	-	-	--------	1114593	VA2,VAA1,VAA8,VAC2,VAG2,VC2,VCN2,VD2,VDB2,VDE2,VK2,VKB2,VKE4 VKX4,VM2,VMA2,VME2,VMS2,VNG1,VNG2,VPE4,VPE5,VPX4,VPX5,VSD,VSD4 VTH4,VWA2,VWC,VWE,VWT4,VX8,VXB,VXE2,VXE4,VXE6,VXE8,VXEB,VXG VXG2,VXQ4
	13310-ZK6-010	.....	1	-	-	-	--------	1119738	SXB7,SXB9,SXE7,SXE9
	13310-ZK6-672	.....	1	-	-	-	1113348	--------	VE39,VEP7,VKE9,VKX9,VN17,VN27,VNS9,VPE7,VPE9,VPX7,VPX9,VS39 VS49,VSD7,VSD9,VWC7,VWC9,VX39,VXB7,VXB9,VXE7,VXE9,VXP7
	13310-ZK6-602	.....	1	-	-	-	1113740	--------	QXB7,QXB9,QXE7,QXE9,QXQ7

CRANKSHAFT

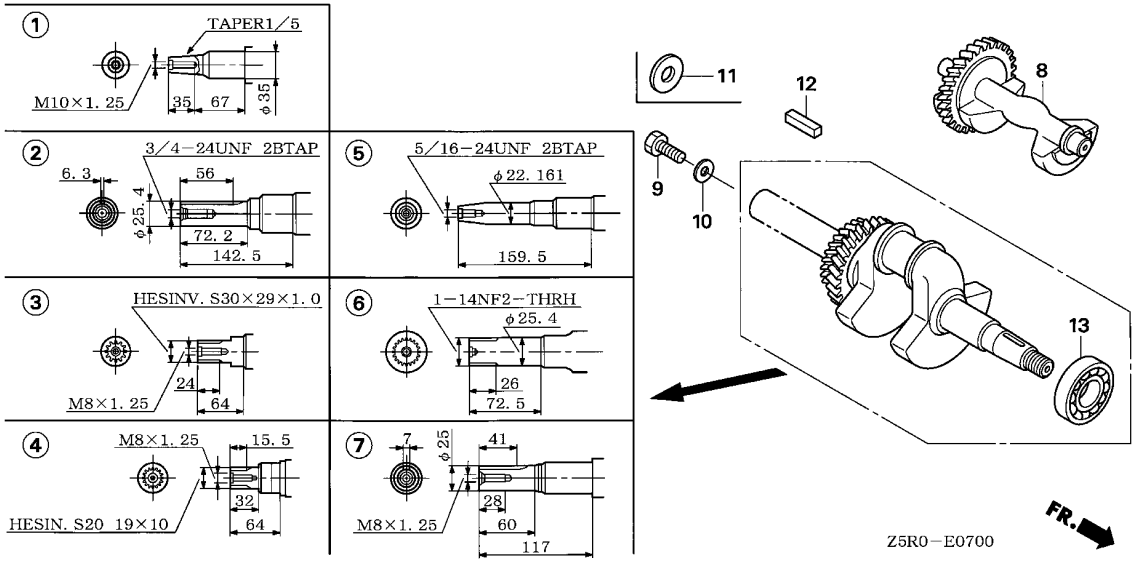

Ref. No.	Part No.	Description	Reqd. QTY GX 390 U1	GX 390 R1	GX 390 U2	GX 390 R2	Serial No.		Parts catalogue code
(5)	13310-ZF6-W42	CRANKSHAFT COMP.	1	-	-	-	1114594	--------	VA2,VAA1,VAA8,VAC2,VAG2,VC2,VCN2,VD2,VDB2,VDE2,VK2,VKB2,VKE4 VKX4,VM2,VMA2,VME2,VMS2,VNG1,VNG2,VPE4,VPE5,VPX4,VPX5,VSD,VSD4 VTH4,VWA2,VWC,VWE,VWT4,VX8,VXB,VXE2,VXE4,VXE6,VXE8,VXEB,VXG VXG2,VXQ4
	13310-ZK6-020	.....	1	-	-	-	1119739	--------	SXB7,SXB9,SXE7,SXE9
	13310-ZF6-W42	.....	-	1	-	-	--------	--------	VAA1,VAA8,VAC2,VAG2,VC2,VCN2,VD2,VDB2,VDE2,VK2,VKB2,VKE4,VKX4 VNG1,VPE4,VPE5,VPX4,VPX5,VSD4,VTH4,VWC,VWE,VWS,VWT4,VXG
	13310-ZK6-672	.....	-	1	-	-	--------	--------	VEP9,VN17,VNS9,VPE7,VPE9,VPX7,VPX9,VS39,VS49,VWC7,VWC9
6	13310-ZF6-W62	CRANKSHAFT COMP.	1	1	-	1	--------	--------	PXM8,PXU4
	13310-ZF6-W61	.....	1	-	-	-	--------	1121237	PA2,PAE2,PXE8,PXU
	13310-ZF6-W62	.....	1	-	-	-	1121238	--------	PA2,PAE2,PXE8,PXU
			-	-	1	-	--------	--------	PXE8,PXU,PXU4
7	13310-ZF6-W72	CRANKSHAFT COMP.	1	-	-	-	--------	--------	SM34,SMX4
	13310-ZF6-W71	.....	1	-	-	-	--------	1121157	SCK4,SHQ4,SM32,SMC1,SMD3,SMEO,SME6,SMX2,SNC,STC4,SWA4,SXB,SXE4 SXE8,SXEB,SXQ4,SXU
	13310-ZF6-W72	.....	1	-	-	-	1121158	--------	SCK4,SHQ4,SM32,SMC1,SMD3,SMEO,SME6,SMX2,SNC,STC4,SWA4,SXB,SXE4 SXE8,SXEB,SXQ4,SXU
			-	-	1	-	--------	--------	SM32,SM34,SMX2,SXE4
8	13351-ZE3-010	WEIGHT, BALANCER	1	1	1	1			
9	92101-08025-0A	BOLT, HEX., 8X25	1	-	1	-	--------	--------	SM32,SM34,SMX2,SMX4,STC4
	95701-08025-00	BOLT, FLANGE, 8X25	1	-	-	-	--------	--------	HA2,HJA2
	90107-959-003	BOLT, HEX., 8X25	1	-	-	-	--------	--------	LKE,LX2,LXE2,LXE4,LXE8,LXQ4,LXU
10	90473-842-000	WASHER, 8MM	1	-	-	-	--------	--------	HA2,HJA2
	90473-ZE3-010	.....	1	-	-	-	--------	--------	LKE,LX2,LXE2,LXE4,LXE8,LXQ4,LXU
11	90534-706-010	WASHER, LOCK, 8MM	1	-	1	-	--------	--------	SM32,SM34,SMX2,SMX4,STC4

Ref. No.	Part No.	Description	Reqd. QTY GX 390 U1	GX 390 R1	GX 390 U2	GX 390 R2	Serial No.		Parts catalogue code
12	90745-ZE2-600	KEY, 6.3X6.3X43 ·····	1	1	1	-	--------	--------	PA2,PAE2,QA2,QA26,QAA2,QAE2,QAE6,QAW,QC2,QDW9,QE,QK4,QKA4,QKB2 QNB2,QND,QNE2,QNE6,QNE8,QNE9,QNK,QNR2,QNR6,QSC2,QTR2,QWA2,QWA4 QWC4,QWH2,QWT2,QXB,QXB7,QXB9,QXC4,QXC6,QXC9,QXE4,QXE6,QXE7 QXE8,QXE9,QXEB,QXH9,QXQ4,QXQ7,QXS4,QXU
	90741-805-000	KEY, 7X7X33 ·····	1	-	1	-	--------	--------	SCK4,SHQ4,SM32,SM34,SMC1,SMX2,SMX4,STC4,SWA4,SXB,SXB7,SXB9 SXE4,SXE7,SXE8,SXE9,SXEB,SXQ4,SXU
	90741-889-810	KEY, 7X7X33(YELLOW)(O/S) ····	(1)	-	(1)	-	--------	--------	SCK4,SHQ4,SMC1,SMD3,SMEO,SME6,STC4,SWA4,SXB,SXB7,SXB9,SXE4 SXE7,SXE8,SXE9,SXEB,SXQ4,SXU
			1	-	-	-	--------	--------	SNC
13	91001-ZF6-013	BEARING, RADIAL BALL, 6207SH	1	-	-	-	--------	--------	PXU4,QHB4,QNB2,QXH9,SM34,SMX4,VC2N,VEP9,VWS
	91001-ZF6-003	BEARING, RADIAL BALL, 6207S ·	1	-	-	-	--------	1113347	VE39,VEP7,VKE9,VKX9,VN17,VN27,VNS9,VPE7,VPE9,VPX7,VPX9,VS39 VS49,VSD7,VSD9,VWC7,VWC9,VX39,VXB7,VXB9,VXE7,VXE9,VXP7
			1	-	-	-	--------	1113739	LKE,LX2,LXE2,LXE4,LXE8,LXQ4,LXU,QA2,QA26,QAA2,QAE2,QAE6,QAW QC2,QDW9,QE,QK4,QKA4,QKB2,QMEO,QND,QNE2,QNE6,QNE8,QNE9,QNK QNR2,QNR6,QSC2,QTR2,QWA2,QWA4,QWC4,QWH2,QWT2,QXB,QXB7,QXB9 QXC4,QXC6,QXC9,QXE4,QXE6,QXE7,QXE8,QXE9,QXEB,QXQ4,QXQ7,QXS4 QXU
			1	-	-	-	--------	1114018	ED6,EDD2,EDS2,EDS6,EDT6,EN6,ENT2
			1	-	-	-	--------	1114593	VA2,VAA1,VAA8,VAC2,VAG2,VC2,VCN2,VD2,VDB2,VDE2,VK2,VKB2,VKE4 VKX4,VM2,VMA2,VME2,VMS2,VNG1,VNG2,VPE4,VPE5,VPX4,VPX5,VSD,VSD4 VTH4,VWA2,VWC,VWE,VWT4,VX8,VXB,VXE2,VXE4,VXE6,VXE8,VXEB,VXG VXG2,VXQ4
			1	-	-	-	--------	1119738	SXB7,SXB9,SXE7,SXE9
			1	-	-	-	--------	1121157	SCK4,SHQ4,SM32,SMC1,SMD3,SMEO,SME6,SMX2,SNC,STC4,SWA4,SXB,SXE4 SXE8,SXEB,SXQ4,SXU
			1	-	-	-	--------	1121229	HA2,HJA2
			1	-	-	-	--------	1121237	PA2,PAE2,PXE8,PXU
	91001-ZF6-013	BEARING, RADIAL BALL, 6207SH	1	-	-	-	1113348	--------	VE39,VEP7,VKE9,VKX9,VN17,VN27,VNS9,VPE7,VPE9,VPX7,VPX9,VS39 VS49,VSD7,VSD9,VWC7,VWC9,VX39,VXB7,VXB9,VXE7,VXE9,VXP7
			1	-	-	-	1113740	--------	LKE,LX2,LXE2,LXE4,LXE8,LXQ4,LXU,QA2,QA26,QAA2,QAE2,QAE6,QAW QC2,QDW9,QE,QK4,QKA4,QKB2,QMEO,QND,QNE2,QNE6,QNE8,QNE9,QNK QNR2,QNR6,QSC2,QTR2,QWA2,QWA4,QWC4,QWH2,QWT2,QXB,QXB7,QXB9 QXC4,QXC6,QXC9,QXE4,QXE6,QXE7,QXE8,QXE9,QXEB,QXQ4,QXQ7,QXS4 QXU
			1	-	-	-	1114019	--------	ED6,EDD2,EDS2,EDS6,EDT6,EN6,ENT2
			1	-	-	-	1114594	--------	VA2,VAA1,VAA8,VAC2,VAG2,VC2,VCN2,VD2,VDB2,VDE2,VK2,VKB2,VKE4 VKX4,VM2,VMA2,VME2,VMS2,VNG1,VNG2,VPE4,VPE5,VPX4,VPX5,VSD,VSD4 VTH4,VWA2,VWC,VWE,VWT4,VX8,VXB,VXE2,VXE4,VXE6,VXE8,VXEB,VXG VXG2,VXQ4
			1	-	-	-	1119739	--------	SXB7,SXB9,SXE7,SXE9
			1	-	-	-	1121158	--------	SCK4,SHQ4,SM32,SMC1,SMD3,SMEO,SME6,SMX2,SNC,STC4,SWA4,SXB,SXE4 SXE8,SXEB,SXQ4,SXU
			1	-	-	-	1121230	--------	HA2,HJA2
			1	-	-	-	1121238	--------	PA2,PAE2,PXE8,PXU
			-	1	1	1			

PISTON

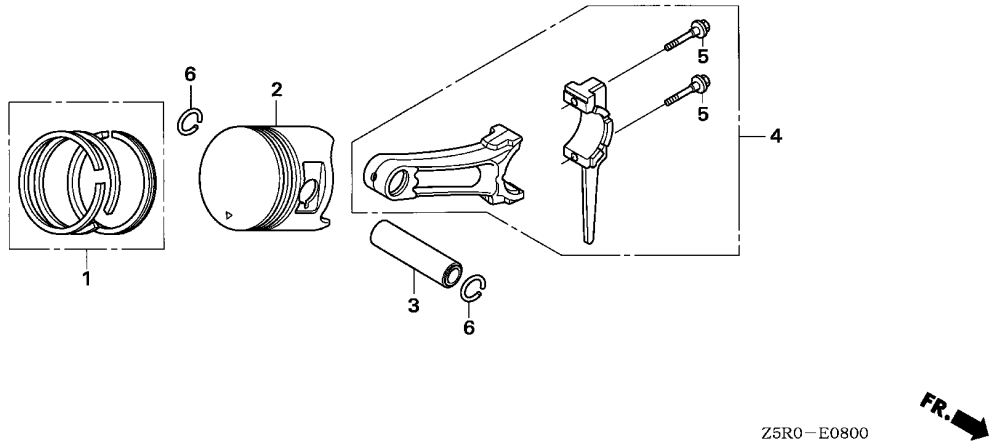

Ref. No.	L.O.N.	(Relative ref. Number) Description	F.R.T.

Ref. No.	Part No.	Description	Reqd. QTY GX 390 U1	GX 390 R1	GX 390 U2	GX 390 R2	Serial No.		Parts catalogue code
1	13010-Z5R-004	RING SET, PISTON(STD.) (TEIKOKU)	1	-	-	-	--------	--------	PXU4,QHB4,SM34,SMX4,VC2N
	13011-Z5R-004	RING SET, PISTON(0.25) (TEIKOKU)	(1)	-	-	-	--------	--------	PXU4,QHB4,SM34,SMX4,VC2N
	13012-Z5R-004	RING SET, PISTON(0.50) (TEIKOKU)	(1)	-	-	-	--------	--------	PXU4,QHB4,SM34,SMX4,VC2N
	13013-Z5R-004	RING SET, PISTON(0.75) (TEIKOKU)	(1)	-	-	-	--------	--------	PXU4,QHB4,SM34,SMX4,VC2N
	13010-ZF6-003	RING SET, PISTON(STD.)(NIPPON)	1	-	-	-	--------	1522959	ED6,EDD2,EDS2,EDS6,EDT6,EN6,ENT2,HA2,HJA2,LKE,LX2,LXE2,LXE4 LXE8,LXQ4,LXU,PA2,PAE2,PXE8,PXU,QA2,QA26,QAA2,QAE2,QAE6,QAW QC2,QDW9,QE,QK4,QKA4,QKB2,QMEO,QNB2,QND,QNE2,QNE6,QNE8,QNE9 QNK,QNR2,QNR6,QSC2,QTR2,QWA2,QWA4,QWC4,QWH2,QWT2,QXB,QXB7,QXB9 QXC4,QXC6,QXC9,QXE4,QXE6,QXE7,QXE8,QXE9,QXEB,QXH9,QXQ4,QXQ7 QXS4,QXU,SCK4,SHQ4,SM32,SMC1,SMD3,SMEO,SME6,SMX2,SNC,STC4,SWA4 SXB,SXB7,SXB9,SXE4,SXE7,SXE8,SXE9,SXEB,SXQ4,SXU,VA2,VAA1,VAA8 VAC2,VAG2,VC2,VCN2,VD2,VDB2,VDE2,VE39,VEP7,VEP9,VK2,VKB2,VKE4 VKE9,VKX4,VKX9,VM2,VMA2,VME2,VMS2,VN17,VN27,VNG1,VNG2,VNS9 VPE4,VPE5,VPE7,VPE9,VPX4,VPX5,VPX7,VPX9,VS39,VS49,VSD,VSD4 VSD7,VSD9,VTH4,VWA2,VWC,VWC7,VWC9,VWE,VWS,VWT4,VX39,VX8,VXB VXB7,VXB9,VXE2,VXE4,VXE6,VXE7,VXE8,VXE9,VXEB,VXG,VXG2,VXP7 VXQ4

PISTON

Ref. No.	Part No.	Description	Reqd. QTY GX 390 U1	GX 390 R1	GX 390 U2	GX 390 R2	Serial No.		Parts catalogue code
(1)	13010-ZF6-005	RING SET, PISTON(STD.) (TEIKOKU)	1	-	-	-	--------	1522959	ED6,EDD2,EDS2,EDS6,EDT6,EN6,ENT2,HA2,HJA2,LKE,LX2,LXE2,LXE4 LXE8,LXQ4,LXU,PA2,PAE2,PXE8,PXU,QA2,QA26,QAA2,QAE2,QAE6,QAW QC2,QDW9,QE,QK4,QKA4,QKB2,QMEO,QNB2,QND,QNE2,QNE6,QNE8,QNE9 QNK,QNR2,QNR6,QSC2,QTR2,QWA2,QWA4,QWC4,QWH2,QWT2,QXB,QXB7,QXB9 QXC4,QXC6,QXC9,QXE4,QXE6,QXE7,QXE8,QXE9,QXEB,QXH9,QXQ4,QXQ7 QXS4,QXU,SCK4,SHQ4,SM32,SMC1,SMD3,SMEO,SME6,SMX2,SNC,STC4,SWA4 SXB,SXB7,SXB9,SXE4,SXE7,SXE8,SXE9,SXEB,SXQ4,SXU,VA2,VAA1,VAA8 VAC2,VAG2,VC2,VCN2,VD2,VDB2,VDE2,VE39,VEP7,VEP9,VK2,VKB2,VKE4 VKE9,VKX4,VKX9,VM2,VMA2,VME2,VMS2,VN17,VN27,VNG1,VNG2,VNS9 VPE4,VPE5,VPE7,VPE9,VPX4,VPX5,VPX7,VPX9,VS39,VS49,VSD,VSD4 VSD7,VSD9,VTH4,VWA2,VWC,VWC7,VWC9,VWE,VWS,VWT4,VX39,VX8,VXB VXB7,VXB9,VXE2,VXE4,VXE6,VXE7,VXE8,VXE9,VXEB,VXG,VXG2,VXP7 VXQ4
	13011-ZF6-003	RING SET, PISTON(0.25)(NIPPON)	(1)	-	-	-	--------	1522959	ED6,EDD2,EDS2,EDS6,EDT6,EN6,ENT2,HA2,HJA2,LKE,LX2,LXE2,LXE4 LXE8,LXQ4,LXU,PA2,PAE2,PXE8,PXU,QA2,QA26,QAA2,QAE2,QAE6,QAW QC2,QDW9,QE,QK4,QKA4,QKB2,QMEO,QNB2,QND,QNE2,QNE6,QNE8,QNE9 QNK,QNR2,QNR6,QSC2,QTR2,QWA2,QWA4,QWC4,QWH2,QWT2,QXB,QXB7,QXB9 QXC4,QXC6,QXC9,QXE4,QXE6,QXE7,QXE8,QXE9,QXEB,QXH9,QXQ4,QXQ7 QXS4,QXU,SCK4,SHQ4,SM32,SMC1,SMD3,SMEO,SME6,SMX2,SNC,STC4,SWA4 SXB,SXB7,SXB9,SXE4,SXE7,SXE8,SXE9,SXEB,SXQ4,SXU,VA2,VAA1,VAA8 VAC2,VAG2,VC2,VCN2,VD2,VDB2,VDE2,VE39,VEP7,VEP9,VK2,VKB2,VKE4 VKE9,VKX4,VKX9,VM2,VMA2,VME2,VMS2,VN17,VN27,VNG1,VNG2,VNS9 VPE4,VPE5,VPE7,VPE9,VPX4,VPX5,VPX7,VPX9,VS39,VS49,VSD,VSD4 VSD7,VSD9,VTH4,VWA2,VWC,VWC7,VWC9,VWE,VWS,VWT4,VX39,VX8,VXB VXB7,VXB9,VXE2,VXE4,VXE6,VXE7,VXE8,VXE9,VXEB,VXG,VXG2,VXP7 VXQ4
	13011-ZF6-005	RING SET, PISTON(0.25) (TEIKOKU)	(1)	-	-	-	--------	1522959	ED6,EDD2,EDS2,EDS6,EDT6,EN6,ENT2,HA2,HJA2,LKE,LX2,LXE2,LXE4 LXE8,LXQ4,LXU,PA2,PAE2,PXE8,PXU,QA2,QA26,QAA2,QAE2,QAE6,QAW QC2,QDW9,QE,QK4,QKA4,QKB2,QMEO,QNB2,QND,QNE2,QNE6,QNE8,QNE9 QNK,QNR2,QNR6,QSC2,QTR2,QWA2,QWA4,QWC4,QWH2,QWT2,QXB,QXB7,QXB9 QXC4,QXC6,QXC9,QXE4,QXE6,QXE7,QXE8,QXE9,QXEB,QXH9,QXQ4,QXQ7 QXS4,QXU,SCK4,SHQ4,SM32,SMC1,SMD3,SMEO,SME6,SMX2,SNC,STC4,SWA4 SXB,SXB7,SXB9,SXE4,SXE7,SXE8,SXE9,SXEB,SXQ4,SXU,VA2,VAA1,VAA8 VAC2,VAG2,VC2,VCN2,VD2,VDB2,VDE2,VE39,VEP7,VEP9,VK2,VKB2,VKE4 VKE9,VKX4,VKX9,VM2,VMA2,VME2,VMS2,VN17,VN27,VNG1,VNG2,VNS9 VPE4,VPE5,VPE7,VPE9,VPX4,VPX5,VPX7,VPX9,VS39,VS49,VSD,VSD4 VSD7,VSD9,VTH4,VWA2,VWC,VWC7,VWC9,VWE,VWS,VWT4,VX39,VX8,VXB VXB7,VXB9,VXE2,VXE4,VXE6,VXE7,VXE8,VXE9,VXEB,VXG,VXG2,VXP7 VXQ4
	13012-ZF6-003	RING SET, PISTON(0.50)(NIPPON)	(1)	-	-	-	--------	1522959	ED6,EDD2,EDS2,EDS6,EDT6,EN6,ENT2,HA2,HJA2,LKE,LX2,LXE2,LXE4 LXE8,LXQ4,LXU,PA2,PAE2,PXE8,PXU,QA2,QA26,QAA2,QAE2,QAE6,QAW QC2,QDW9,QE,QK4,QKA4,QKB2,QMEO,QNB2,QND,QNE2,QNE6,QNE8,QNE9 QNK,QNR2,QNR6,QSC2,QTR2,QWA2,QWA4,QWC4,QWH2,QWT2,QXB,QXB7,QXB9 QXC4,QXC6,QXC9,QXE4,QXE6,QXE7,QXE8,QXE9,QXEB,QXH9,QXQ4,QXQ7 QXS4,QXU,SCK4,SHQ4,SM32,SMC1,SMD3,SMEO,SME6,SMX2,SNC,STC4,SWA4 SXB,SXB7,SXB9,SXE4,SXE7,SXE8,SXE9,SXEB,SXQ4,SXU,VA2,VAA1,VAA8 VAC2,VAG2,VC2,VCN2,VD2,VDB2,VDE2,VE39,VEP7,VEP9,VK2,VKB2,VKE4 VKE9,VKX4,VKX9,VM2,VMA2,VME2,VMS2,VN17,VN27,VNG1,VNG2,VNS9 VPE4,VPE5,VPE7,VPE9,VPX4,VPX5,VPX7,VPX9,VS39,VS49,VSD,VSD4 VSD7,VSD9,VTH4,VWA2,VWC,VWC7,VWC9,VWE,VWS,VWT4,VX39,VX8,VXB VXB7,VXB9,VXE2,VXE4,VXE6,VXE7,VXE8,VXE9,VXEB,VXG,VXG2,VXP7 VXQ4

PISTON

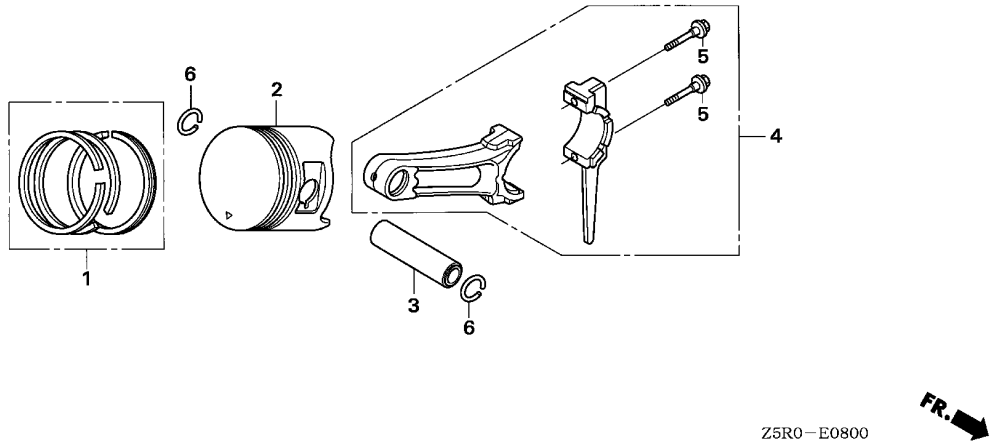

Ref. No.	Part No.	Description	Reqd. QTY GX 390 U1	GX 390 R1	GX 390 U2	GX 390 R2	Serial No.		Parts catalogue code
(1)	13012-ZF6-005	RING SET, PISTON(0.50) (TEIKOKU)	(1)	-	-	-	--------	1522959	ED6,EDD2,EDS2,EDS6,EDT6,EN6,ENT2,HA2,HJA2,LKE,LX2,LXE2,LXE4 LXE8,LXQ4,LXU,PA2,PAE2,PXE8,PXU,QA2,QA26,QAA2,QAE2,QAE6,QAW QC2,QDW9,QE,QK4,QKA4,QKB2,QMEO,QNB2,QND,QNE2,QNE6,QNE8,QNE9 QNK,QNR2,QNR6,QSC2,QTR2,QWA2,QWA4,QWC4,QWH2,QWT2,QXB,QXB7,QXB9 QXC4,QXC6,QXC9,QXE4,QXE6,QXE7,QXE8,QXE9,QXEB,QXH9,QXQ4,QXQ7 QXS4,QXU,SCK4,SHQ4,SM32,SMC1,SMD3,SMEO,SME6,SMX2,SNC,STC4,SWA4 SXB,SXB7,SXB9,SXE4,SXE7,SXE8,SXE9,SXEB,SXQ4,SXU,VA2,VAA1,VAA8 VAC2,VAG2,VC2,VCN2,VD2,VDB2,VDE2,VE39,VEP7,VEP9,VK2,VKB2,VKE4 VKE9,VKX4,VKX9,VM2,VMA2,VME2,VMS2,VN17,VN27,VNG1,VNG2,VNS9 VPE4,VPE5,VPE7,VPE9,VPX4,VPX5,VPX7,VPX9,VS39,VS49,VSD,VSD4 VSD7,VSD9,VTH4,VWA2,VWC,VWC7,VWC9,VWE,VWS,VWT4,VX39,VX8,VXB VXB7,VXB9,VXE2,VXE4,VXE6,VXE7,VXE8,VXE9,VXEB,VXG,VXG2,VXP7 VXQ4
	13013-ZF6-003	RING SET, PISTON(0.75)(NIPPON)	(1)	-	-	-	--------	1522959	ED6,EDD2,EDS2,EDS6,EDT6,EN6,ENT2,HA2,HJA2,LKE,LX2,LXE2,LXE4 LXE8,LXQ4,LXU,PA2,PAE2,PXE8,PXU,QA2,QA26,QAA2,QAE2,QAE6,QAW QC2,QDW9,QE,QK4,QKA4,QKB2,QMEO,QNB2,QND,QNE2,QNE6,QNE8,QNE9 QNK,QNR2,QNR6,QSC2,QTR2,QWA2,QWA4,QWC4,QWH2,QWT2,QXB,QXB7,QXB9 QXC4,QXC6,QXC9,QXE4,QXE6,QXE7,QXE8,QXE9,QXEB,QXH9,QXQ4,QXQ7 QXS4,QXU,SCK4,SHQ4,SM32,SMC1,SMD3,SMEO,SME6,SMX2,SNC,STC4,SWA4 SXB,SXB7,SXB9,SXE4,SXE7,SXE8,SXE9,SXEB,SXQ4,SXU,VA2,VAA1,VAA8 VAC2,VAG2,VC2,VCN2,VD2,VDB2,VDE2,VE39,VEP7,VEP9,VK2,VKB2,VKE4 VKE9,VKX4,VKX9,VM2,VMA2,VME2,VMS2,VN17,VN27,VNG1,VNG2,VNS9 VPE4,VPE5,VPE7,VPE9,VPX4,VPX5,VPX7,VPX9,VS39,VS49,VSD,VSD4 VSD7,VSD9,VTH4,VWA2,VWC,VWC7,VWC9,VWE,VWS,VWT4,VX39,VX8,VXB VXB7,VXB9,VXE2,VXE4,VXE6,VXE7,VXE8,VXE9,VXEB,VXG,VXG2,VXP7 VXQ4

Ref. No.	Part No.	Description	Reqd. QTY GX 390 U1	GX 390 R1	GX 390 U2	GX 390 R2	Serial No.	Parts catalogue code
(1)	13013-ZF6-005	RING SET, PISTON(0.75) (TEIKOKU)	(1)	-	-	-	-------- 1522959	ED6,EDD2,EDS2,EDS6,EDT6,EN6,ENT2,HA2,HJA2,LKE,LX2,LXE2,LXE4 LXE8,LXQ4,LXU,PA2,PAE2,PXE8,PXU,QA2,QA26,QAA2,QAE2,QAE6,QAW QC2,QDW9,QE,QK4,QKA4,QKB2,QME0,QNB2,QND,QNE2,QNE6,QNE8,QNE9 QNK,QNR2,QNR6,QSC2,QTR2,QWA2,QWA4,QWC4,QWH2,QWT2,QXB,QXB7,QXB9 QXC4,QXC6,QXC9,QXE4,QXE6,QXE7,QXE8,QXE9,QXEB,QXH9,QXQ4,QXQ7 QXS4,QXU,SCK4,SHQ4,SM32,SMC1,SMD3,SME0,SME6,SMX2,SNC,STC4,SWA4 SXB,SXB7,SXB9,SXE4,SXE7,SXE8,SXE9,SXEB,SXQ4,SXU,VA2,VAA1,VAA8 VAC2,VAG2,VC2,VCN2,VD2,VDB2,VDE2,VE39,VEP7,VEP9,VK2,VKB2,VKE4 VKE9,VKX4,VKX9,VM2,VMA2,VME2,VMS2,VN17,VN27,VNG1,VNG2,VNS9 VPE4,VPE5,VPE7,VPE9,VPX4,VPX5,VPX7,VPX9,VS39,VS49,VSD,VSD4 VSD7,VSD9,VTH4,VWA2,VWC,VWC7,VWC9,VWE,VWS,VWT4,VX39,VX8,VXB VXB7,VXB9,VXE2,VXE4,VXE6,VXE7,VXE8,VXE9,VXEB,VXG,VXG2,VXP7 VXQ4
	13010-Z5R-004	RING SET, PISTON(STD.) (TEIKOKU)	1	-	-	-	1522960 --------	ED6,EDD2,EDS2,EDS6,EDT6,EN6,ENT2,HA2,HJA2,LKE,LX2,LXE2,LXE4 LXE8,LXQ4,LXU,PA2,PAE2,PXE8,PXU,QA2,QA26,QAA2,QAE2,QAE6,QAW QC2,QDW9,QE,QK4,QKA4,QKB2,QME0,QNB2,QND,QNE2,QNE6,QNE8,QNE9 QNK,QNR2,QNR6,QSC2,QTR2,QWA2,QWA4,QWC4,QWH2,QWT2,QXB,QXB7,QXB9 QXC4,QXC6,QXC9,QXE4,QXE6,QXE7,QXE8,QXE9,QXEB,QXH9,QXQ4,QXQ7 QXS4,QXU,SCK4,SHQ4,SM32,SMC1,SMD3,SME0,SME6,SMX2,SNC,STC4,SWA4 SXB,SXB7,SXB9,SXE4,SXE7,SXE8,SXE9,SXEB,SXQ4,SXU,VA2,VAA1,VAA8 VAC2,VAG2,VC2,VCN2,VD2,VDB2,VDE2,VE39,VEP7,VEP9,VK2,VKB2,VKE4 VKE9,VKX4,VKX9,VM2,VMA2,VME2,VMS2,VN17,VN27,VNG1,VNG2,VNS9 VPE4,VPE5,VPE7,VPE9,VPX4,VPX5,VPX7,VPX9,VS39,VS49,VSD,VSD4 VSD7,VSD9,VTH4,VWA2,VWC,VWC7,VWC9,VWE,VWS,VWT4,VX39,VX8,VXB VXB7,VXB9,VXE2,VXE4,VXE6,VXE7,VXE8,VXE9,VXEB,VXG,VXG2,VXP7 VXQ4
	13011-Z5R-004	RING SET, PISTON(0.25) (TEIKOKU)	(1)	-	-	-	1522960 --------	ED6,EDD2,EDS2,EDS6,EDT6,EN6,ENT2,HA2,HJA2,LKE,LX2,LXE2,LXE4 LXE8,LXQ4,LXU,PA2,PAE2,PXE8,PXU,QA2,QA26,QAA2,QAE2,QAE6,QAW QC2,QDW9,QE,QK4,QKA4,QKB2,QME0,QNB2,QND,QNE2,QNE6,QNE8,QNE9 QNK,QNR2,QNR6,QSC2,QTR2,QWA2,QWA4,QWC4,QWH2,QWT2,QXB,QXB7,QXB9 QXC4,QXC6,QXC9,QXE4,QXE6,QXE7,QXE8,QXE9,QXEB,QXH9,QXQ4,QXQ7 QXS4,QXU,SCK4,SHQ4,SM32,SMC1,SMD3,SME0,SME6,SMX2,SNC,STC4,SWA4 SXB,SXB7,SXB9,SXE4,SXE7,SXE8,SXE9,SXEB,SXQ4,SXU,VA2,VAA1,VAA8 VAC2,VAG2,VC2,VCN2,VD2,VDB2,VDE2,VE39,VEP7,VEP9,VK2,VKB2,VKE4 VKE9,VKX4,VKX9,VM2,VMA2,VME2,VMS2,VN17,VN27,VNG1,VNG2,VNS9 VPE4,VPE5,VPE7,VPE9,VPX4,VPX5,VPX7,VPX9,VS39,VS49,VSD,VSD4 VSD7,VSD9,VTH4,VWA2,VWC,VWC7,VWC9,VWE,VWS,VWT4,VX39,VX8,VXB VXB7,VXB9,VXE2,VXE4,VXE6,VXE7,VXE8,VXE9,VXEB,VXG,VXG2,VXP7 VXQ4
	13012-Z5R-004	RING SET, PISTON(0.50) (TEIKOKU)	(1)	-	-	-	1522960 --------	ED6,EDD2,EDS2,EDS6,EDT6,EN6,ENT2,HA2,HJA2,LKE,LX2,LXE2,LXE4 LXE8,LXQ4,LXU,PA2,PAE2,PXE8,PXU,QA2,QA26,QAA2,QAE2,QAE6,QAW QC2,QDW9,QE,QK4,QKA4,QKB2,QME0,QNB2,QND,QNE2,QNE6,QNE8,QNE9 QNK,QNR2,QNR6,QSC2,QTR2,QWA2,QWA4,QWC4,QWH2,QWT2,QXB,QXB7,QXB9 QXC4,QXC6,QXC9,QXE4,QXE6,QXE7,QXE8,QXE9,QXEB,QXH9,QXQ4,QXQ7 QXS4,QXU,SCK4,SHQ4,SM32,SMC1,SMD3,SME0,SME6,SMX2,SNC,STC4,SWA4 SXB,SXB7,SXB9,SXE4,SXE7,SXE8,SXE9,SXEB,SXQ4,SXU,VA2,VAA1,VAA8 VAC2,VAG2,VC2,VCN2,VD2,VDB2,VDE2,VE39,VEP7,VEP9,VK2,VKB2,VKE4 VKE9,VKX4,VKX9,VM2,VMA2,VME2,VMS2,VN17,VN27,VNG1,VNG2,VNS9 VPE4,VPE5,VPE7,VPE9,VPX4,VPX5,VPX7,VPX9,VS39,VS49,VSD,VSD4 VSD7,VSD9,VTH4,VWA2,VWC,VWC7,VWC9,VWE,VWS,VWT4,VX39,VX8,VXB VXB7,VXB9,VXE2,VXE4,VXE6,VXE7,VXE8,VXE9,VXEB,VXG,VXG2,VXP7 VXQ4

PISTON

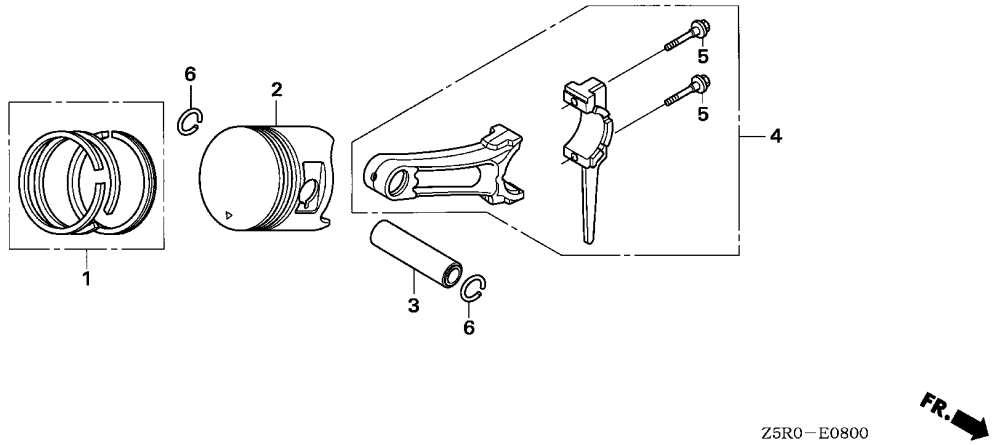

Ref. No.	Part No.	Description	Reqd. QTY GX 390 U1	GX 390 R1	GX 390 U2	GX 390 R2	Serial No.	Parts catalogue code
(1)	13013-Z5R-004	RING SET, PISTON(0.75) (TEIKOKU)	(1)	-	-	-	1522960 --------	ED6,EDD2,EDS2,EDS6,EDT6,EN6,ENT2,HA2,HJA2,LKE,LX2,LXE2,LXE4 LXE8,LXQ4,LXU,PA2,PAE2,PXE8,PXU,QA2,QA26,QAA2,QAE2,QAE6,QAW QC2,QDW9,QE,QK4,QKA4,QKB2,QME0,QNB2,QND,QNE2,QNE6,QNE8,QNE9 QNK,QNR2,QNR6,QSC2,QTR2,QWA2,QWA4,QWC4,QWH2,QWT2,QXB,QXB7,QXB9 QXC4,QXC6,QXC9,QXE4,QXE6,QXE7,QXE8,QXE9,QXEB,QXH9,QXQ4,QXQ7 QXS4,QXU,SCK4,SHQ4,SM32,SMC1,SMD3,SME0,SME6,SMX2,SNC,STC4,SWA4 SXB,SXB7,SXB9,SXE4,SXE7,SXE8,SXE9,SXEB,SXQ4,SXU,VA2,VAA1,VAA8 VAC2,VAG2,VC2,VCN2,VD2,VDB2,VDE2,VE39,VEP7,VEP9,VK2,VKB2,VKE4 VKE9,VKX4,VKX9,VM2,VMA2,VME2,VMS2,VN17,VN27,VNG1,VNG2,VNS9 VPE4,VPE5,VPE7,VPE9,VPX4,VPX5,VPX7,VPX9,VS39,VS49,VSD,VSD4 VSD7,VSD9,VTH4,VWA2,VWC,VWC7,VWC9,VWE,VWS,VWT4,VX39,VX8,VXB VXB7,VXB9,VXE2,VXE4,VXE6,VXE7,VXE8,VXE9,VXEB,VXG,VXG2,VXP7 VXQ4
	13010-Z5R-004	RING SET, PISTON(STD.) (TEIKOKU)	-	1	1	1		
	13011-Z5R-004	RING SET, PISTON(0.25) (TEIKOKU)	-	(1)	(1)	(1)		
	13012-Z5R-004	RING SET, PISTON(0.50) (TEIKOKU)	-	(1)	(1)	(1)		
	13013-Z5R-004	RING SET, PISTON(0.75) (TEIKOKU)	-	(1)	(1)	(1)		
2	13101-ZF6-W01	PISTON(STD.)	1	-	-	-	-------- --------	PXU4,QHB4,SM34,SMX4,VC2N
	13102-ZF6-W01	PISTON(0.25)	(1)	-	-	-	-------- --------	PXU4,QHB4,SM34,SMX4,VC2N
	13103-ZF6-W01	PISTON(0.50)	(1)	-	-	-	-------- --------	PXU4,QHB4,SM34,SMX4,VC2N
	13104-ZF6-W01	PISTON(0.75)	(1)	-	-	-	-------- --------	PXU4,QHB4,SM34,SMX4,VC2N

PISTON

Ref. No.	Part No.	Description	Reqd. QTY GX 390 U1	GX 390 R1	GX 390 U2	GX 390 R2	Serial No.	Parts catalogue code
(2)	13101-ZF6-W00	PISTON(STD.)	1	-	-	-	-------- 1522959	ED6,EDD2,EDS2,EDS6,EDT6,EN6,ENT2,HA2,HJA2,LKE,LX2,LXE2,LXE4 LXE8,LXQ4,LXU,PA2,PAE2,PXE8,PXU,QA2,QA26,QAA2,QAE2,QAE6,QAW QC2,QDW9,QE,QK4,QKA4,QKB2,QMEO,QNB2,QND,QNE2,QNE6,QNE8,QNE9 QNK,QNR2,QNR6,QSC2,QTR2,QWA2,QWA4,QWC4,QWH2,QWT2,QXB,QXB7,QXB9 QXC4,QXC6,QXC9,QXE4,QXE6,QXE7,QXE8,QXE9,QXEB,QXH9,QXQ4,QXQ7 QXS4,QXU,SCK4,SHQ4,SM32,SMC1,SMD3,SMEO,SME6,SMX2,SNC,STC4,SWA4 SXB,SXB7,SXB9,SXE4,SXE7,SXE8,SXE9,SXEB,SXQ4,SXU,VA2,VAA1,VAA8 VAC2,VAG2,VC2,VCN2,VD2,VDB2,VDE2,VE39,VEP7,VEP9,VK2,VKB2,VKE4 VKE9,VKX4,VKX9,VM2,VMA2,VME2,VMS2,VN17,VN27,VNG1,VNG2,VNS9 VPE4,VPE5,VPE7,VPE9,VPX4,VPX5,VPX7,VPX9,VS39,VS49,VSD,VSD4 VSD7,VSD9,VTH4,VWA2,VWC,VWC7,VWC9,VWE,VWS,VWT4,VX39,VX8,VXB VXB7,VXB9,VXE2,VXE4,VXE6,VXE7,VXE8,VXE9,VXEB,VXG,VXG2,VXP7 VXQ4
	13102-ZF6-W00	PISTON(0.25)	(1)	-	-	-	-------- 1522959	ED6,EDD2,EDS2,EDS6,EDT6,EN6,ENT2,HA2,HJA2,LKE,LX2,LXE2,LXE4 LXE8,LXQ4,LXU,PA2,PAE2,PXE8,PXU,QA2,QA26,QAA2,QAE2,QAE6,QAW QC2,QDW9,QE,QK4,QKA4,QKB2,QMEO,QNB2,QND,QNE2,QNE6,QNE8,QNE9 QNK,QNR2,QNR6,QSC2,QTR2,QWA2,QWA4,QWC4,QWH2,QWT2,QXB,QXB7,QXB9 QXC4,QXC6,QXC9,QXE4,QXE6,QXE7,QXE8,QXE9,QXEB,QXH9,QXQ4,QXQ7 QXS4,QXU,SCK4,SHQ4,SM32,SMC1,SMD3,SMEO,SME6,SMX2,SNC,STC4,SWA4 SXB,SXB7,SXB9,SXE4,SXE7,SXE8,SXE9,SXEB,SXQ4,SXU,VA2,VAA1,VAA8 VAC2,VAG2,VC2,VCN2,VD2,VDB2,VDE2,VE39,VEP7,VEP9,VK2,VKB2,VKE4 VKE9,VKX4,VKX9,VM2,VMA2,VME2,VMS2,VN17,VN27,VNG1,VNG2,VNS9 VPE4,VPE5,VPE7,VPE9,VPX4,VPX5,VPX7,VPX9,VS39,VS49,VSD,VSD4 VSD7,VSD9,VTH4,VWA2,VWC,VWC7,VWC9,VWE,VWS,VWT4,VX39,VX8,VXB VXB7,VXB9,VXE2,VXE4,VXE6,VXE7,VXE8,VXE9,VXEB,VXG,VXG2,VXP7 VXQ4
	13103-ZF6-W00	PISTON(0.50)	(1)	-	-	-	-------- 1522959	ED6,EDD2,EDS2,EDS6,EDT6,EN6,ENT2,HA2,HJA2,LKE,LX2,LXE2,LXE4 LXE8,LXQ4,LXU,PA2,PAE2,PXE8,PXU,QA2,QA26,QAA2,QAE2,QAE6,QAW QC2,QDW9,QE,QK4,QKA4,QKB2,QMEO,QNB2,QND,QNE2,QNE6,QNE8,QNE9 QNK,QNR2,QNR6,QSC2,QTR2,QWA2,QWA4,QWC4,QWH2,QWT2,QXB,QXB7,QXB9 QXC4,QXC6,QXC9,QXE4,QXE6,QXE7,QXE8,QXE9,QXEB,QXH9,QXQ4,QXQ7 QXS4,QXU,SCK4,SHQ4,SM32,SMC1,SMD3,SMEO,SME6,SMX2,SNC,STC4,SWA4 SXB,SXB7,SXB9,SXE4,SXE7,SXE8,SXE9,SXEB,SXQ4,SXU,VA2,VAA1,VAA8 VAC2,VAG2,VC2,VCN2,VD2,VDB2,VDE2,VE39,VEP7,VEP9,VK2,VKB2,VKE4 VKE9,VKX4,VKX9,VM2,VMA2,VME2,VMS2,VN17,VN27,VNG1,VNG2,VNS9 VPE4,VPE5,VPE7,VPE9,VPX4,VPX5,VPX7,VPX9,VS39,VS49,VSD,VSD4 VSD7,VSD9,VTH4,VWA2,VWC,VWC7,VWC9,VWE,VWS,VWT4,VX39,VX8,VXB VXB7,VXB9,VXE2,VXE4,VXE6,VXE7,VXE8,VXE9,VXEB,VXG,VXG2,VXP7 VXQ4
	13104-ZF6-W00	PISTON(0.75)	(1)	-	-	-	-------- 1522959	ED6,EDD2,EDS2,EDS6,EDT6,EN6,ENT2,HA2,HJA2,LKE,LX2,LXE2,LXE4 LXE8,LXQ4,LXU,PA2,PAE2,PXE8,PXU,QA2,QA26,QAA2,QAE2,QAE6,QAW QC2,QDW9,QE,QK4,QKA4,QKB2,QMEO,QNB2,QND,QNE2,QNE6,QNE8,QNE9 QNK,QNR2,QNR6,QSC2,QTR2,QWA2,QWA4,QWC4,QWH2,QWT2,QXB,QXB7,QXB9 QXC4,QXC6,QXC9,QXE4,QXE6,QXE7,QXE8,QXE9,QXEB,QXH9,QXQ4,QXQ7 QXS4,QXU,SCK4,SHQ4,SM32,SMC1,SMD3,SMEO,SME6,SMX2,SNC,STC4,SWA4 SXB,SXB7,SXB9,SXE4,SXE7,SXE8,SXE9,SXEB,SXQ4,SXU,VA2,VAA1,VAA8 VAC2,VAG2,VC2,VCN2,VD2,VDB2,VDE2,VE39,VEP7,VEP9,VK2,VKB2,VKE4 VKE9,VKX4,VKX9,VM2,VMA2,VME2,VMS2,VN17,VN27,VNG1,VNG2,VNS9 VPE4,VPE5,VPE7,VPE9,VPX4,VPX5,VPX7,VPX9,VS39,VS49,VSD,VSD4 VSD7,VSD9,VTH4,VWA2,VWC,VWC7,VWC9,VWE,VWS,VWT4,VX39,VX8,VXB VXB7,VXB9,VXE2,VXE4,VXE6,VXE7,VXE8,VXE9,VXEB,VXG,VXG2,VXP7 VXQ4

PISTON

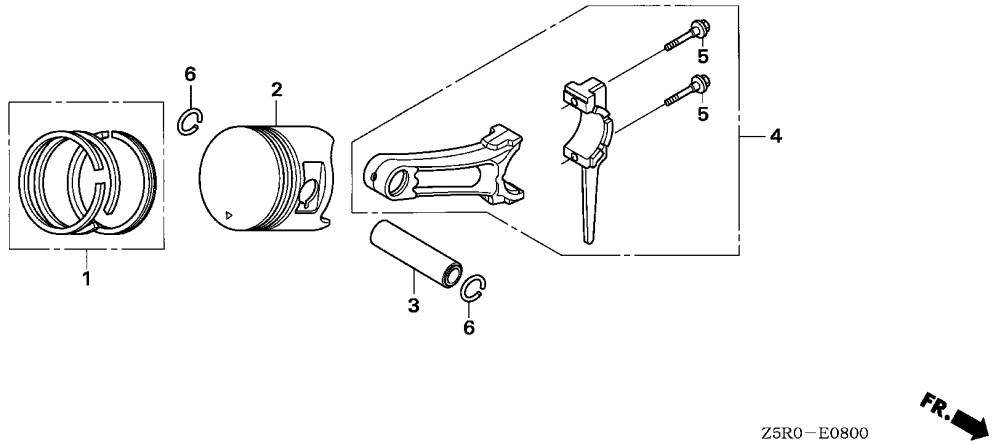

Ref. No.	Part No.	Description	Reqd. QTY GX 390 U1	GX 390 R1	GX 390 U2	GX 390 R2	Serial No.	Parts catalogue code
(2)	13101-ZF6-W01	PISTON(STD.)	1	-	-	-	1522960 --------	ED6,EDD2,EDS2,EDS6,EDT6,EN6,ENT2,HA2,HJA2,LKE,LX2,LXE2,LXE4 LXE8,LXQ4,LXU,PA2,PAE2,PXE8,PXU,QA2,QA26,QAA2,QAE2,QAE6,QAW QC2,QDW9,QE,QK4,QKA4,QKB2,QME0,QNB2,QND,QNE2,QNE6,QNE8,QNE9 QNK,QNR2,QNR6,QSC2,QTR2,QWA2,QWA4,QWC4,QWH2,QWT2,QXB,QXB7,QXB9 QXC4,QXC6,QXC9,QXE4,QXE6,QXE7,QXE8,QXE9,QXEB,QXH9,QXQ4,QXQ7 QXS4,QXU,SCK4,SHQ4,SM32,SMC1,SMD3,SME0,SME6,SMX2,SNC,STC4,SWA4 SXB,SXB7,SXB9,SXE4,SXE7,SXE8,SXE9,SXEB,SXQ4,SXU,VA2,VAA1,VAA8 VAC2,VAG2,VC2,VCN2,VD2,VDB2,VDE2,VE39,VEP7,VEP9,VK2,VKB2,VKE4 VKE9,VKX4,VKX9,VM2,VMA2,VME2,VMS2,VN17,VN27,VNG1,VNG2,VNS9 VPE4,VPE5,VPE7,VPE9,VPX4,VPX5,VPX7,VPX9,VS39,VS49,VSD,VSD4 VSD7,VSD9,VTH4,VWA2,VWC,VWC7,VWC9,VWE,VWS,VWT4,VX39,VX8,VXB VXB7,VXB9,VXE2,VXE4,VXE6,VXE7,VXE8,VXE9,VXEB,VXG,VXG2,VXP7 VXQ4
	13102-ZF6-W01	PISTON(0.25)	(1)	-	-	-	1522960 --------	ED6,EDD2,EDS2,EDS6,EDT6,EN6,ENT2,HA2,HJA2,LKE,LX2,LXE2,LXE4 LXE8,LXQ4,LXU,PA2,PAE2,PXE8,PXU,QA2,QA26,QAA2,QAE2,QAE6,QAW QC2,QDW9,QE,QK4,QKA4,QKB2,QME0,QNB2,QND,QNE2,QNE6,QNE8,QNE9 QNK,QNR2,QNR6,QSC2,QTR2,QWA2,QWA4,QWC4,QWH2,QWT2,QXB,QXB7,QXB9 QXC4,QXC6,QXC9,QXE4,QXE6,QXE7,QXE8,QXE9,QXEB,QXH9,QXQ4,QXQ7 QXS4,QXU,SCK4,SHQ4,SM32,SMC1,SMD3,SME0,SME6,SMX2,SNC,STC4,SWA4 SXB,SXB7,SXB9,SXE4,SXE7,SXE8,SXE9,SXEB,SXQ4,SXU,VA2,VAA1,VAA8 VAC2,VAG2,VC2,VCN2,VD2,VDB2,VDE2,VE39,VEP7,VEP9,VK2,VKB2,VKE4 VKE9,VKX4,VKX9,VM2,VMA2,VME2,VMS2,VN17,VN27,VNG1,VNG2,VNS9 VPE4,VPE5,VPE7,VPE9,VPX4,VPX5,VPX7,VPX9,VS39,VS49,VSD,VSD4 VSD7,VSD9,VTH4,VWA2,VWC,VWC7,VWC9,VWE,VWS,VWT4,VX39,VX8,VXB VXB7,VXB9,VXE2,VXE4,VXE6,VXE7,VXE8,VXE9,VXEB,VXG,VXG2,VXP7 VXQ4

PISTON

Ref. No.	Part No.	Description	Reqd. QTY GX 390 U1	GX 390 R1	GX 390 U2	GX 390 R2	Serial No.	Parts catalogue code
(2)	13103-ZF6-W01	PISTON(0.50) ----------	(1)	-	-	-	1522960 --------	ED6,EDD2,EDS2,EDS6,EDT6,EN6,ENT2,HA2,HJA2,LKE,LX2,LXE2,LXE4 LXE8,LXQ4,LXU,PA2,PAE2,PXE8,PXU,QA2,QA26,QAA2,QAE2,QAE6,QAW QC2,QDW9,QE,QK4,QKA4,QKB2,QME0,QNB2,QND,QNE2,QNE6,QNE8,QNE9 QNK,QNR2,QNR6,QSC2,QTR2,QWA2,QWA4,QWC4,QWH2,QWT2,QXB,QXB7,QXB9 QXC4,QXC6,QXC9,QXE4,QXE6,QXE7,QXE8,QXE9,QXEB,QXH9,QXQ4,QXQ7 QXS4,QXU,SCK4,SHQ4,SM32,SMC1,SMD3,SME0,SME6,SMX2,SNC,STC4,SWA4 SXB,SXB7,SXB9,SXE4,SXE7,SXE8,SXE9,SXEB,SXQ4,SXU,VA2,VAA1,VAA8 VAC2,VAG2,VC2,VCN2,VD2,VDB2,VDE2,VE39,VEP7,VEP9,VK2,VKB2,VKE4 VKE9,VKX4,VKX9,VM2,VMA2,VME2,VMS2,VN17,VN27,VNG1,VNG2,VNS9 VPE4,VPE5,VPE7,VPE9,VPX4,VPX5,VPX7,VPX9,VS39,VS49,VSD,VSD4 VSD7,VSD9,VTH4,VWA2,VWC,VWC7,VWC9,VWE,VWS,VWT4,VX39,VX8,VXB VXB7,VXB9,VXE2,VXE4,VXE6,VXE7,VXE8,VXE9,VXEB,VXG,VXG2,VXP7 VXQ4
	13104-ZF6-W01	PISTON(0.75) ----------	(1)	-	-	-	1522960 --------	ED6,EDD2,EDS2,EDS6,EDT6,EN6,ENT2,HA2,HJA2,LKE,LX2,LXE2,LXE4 LXE8,LXQ4,LXU,PA2,PAE2,PXE8,PXU,QA2,QA26,QAA2,QAE2,QAE6,QAW QC2,QDW9,QE,QK4,QKA4,QKB2,QME0,QNB2,QND,QNE2,QNE6,QNE8,QNE9 QNK,QNR2,QNR6,QSC2,QTR2,QWA2,QWA4,QWC4,QWH2,QWT2,QXB,QXB7,QXB9 QXC4,QXC6,QXC9,QXE4,QXE6,QXE7,QXE8,QXE9,QXEB,QXH9,QXQ4,QXQ7 QXS4,QXU,SCK4,SHQ4,SM32,SMC1,SMD3,SME0,SME6,SMX2,SNC,STC4,SWA4 SXB,SXB7,SXB9,SXE4,SXE7,SXE8,SXE9,SXEB,SXQ4,SXU,VA2,VAA1,VAA8 VAC2,VAG2,VC2,VCN2,VD2,VDB2,VDE2,VE39,VEP7,VEP9,VK2,VKB2,VKE4 VKE9,VKX4,VKX9,VM2,VMA2,VME2,VMS2,VN17,VN27,VNG1,VNG2,VNS9 VPE4,VPE5,VPE7,VPE9,VPX4,VPX5,VPX7,VPX9,VS39,VS49,VSD,VSD4 VSD7,VSD9,VTH4,VWA2,VWC,VWC7,VWC9,VWE,VWS,VWT4,VX39,VX8,VXB VXB7,VXB9,VXE2,VXE4,VXE6,VXE7,VXE8,VXE9,VXEB,VXG,VXG2,VXP7 VXQ4
	13101-ZF6-W01	PISTON(STD.) ----------	-	1	-	-		
	13102-ZF6-W01	PISTON(0.25) ----------	-	(1)	-	-		
	13103-ZF6-W01	PISTON(0.50) ----------	-	(1)	-	-		
	13104-ZF6-W01	PISTON(0.75) ----------	-	(1)	-	-		
	13101-Z5T-800	PISTON(STD.) ----------	-	-	1	1		
	13102-Z5T-800	PISTON(0.25) ----------	-	-	(1)	(1)		
	13103-Z5T-800	PISTON(0.50) ----------	-	-	(1)	(1)		
	13104-Z5T-800	PISTON(0.75) ----------	-	-	(1)	(1)		
3	13111-ZF6-W00	PIN, PISTON ----------	1	1	-	-		
	13111-Z5T-000	----------	-	-	1	1		
4	13200-ZE3-020	ROD ASSY., CONNECTING(STD.) -	1	1	1	1		
	13200-ZE3-315	ROD ASSY., CONNECTING (0.25 UNDER SIZE)	(1)	(1)	(1)	(1)		
5	90001-ZE8-000	BOLT, CONNECTING ROD --------	2	2	2	2		
6	90601-ZE3-000	CLIP, PISTON PIN, 20MM ------	2	2	2	2		

CAMSHAFT

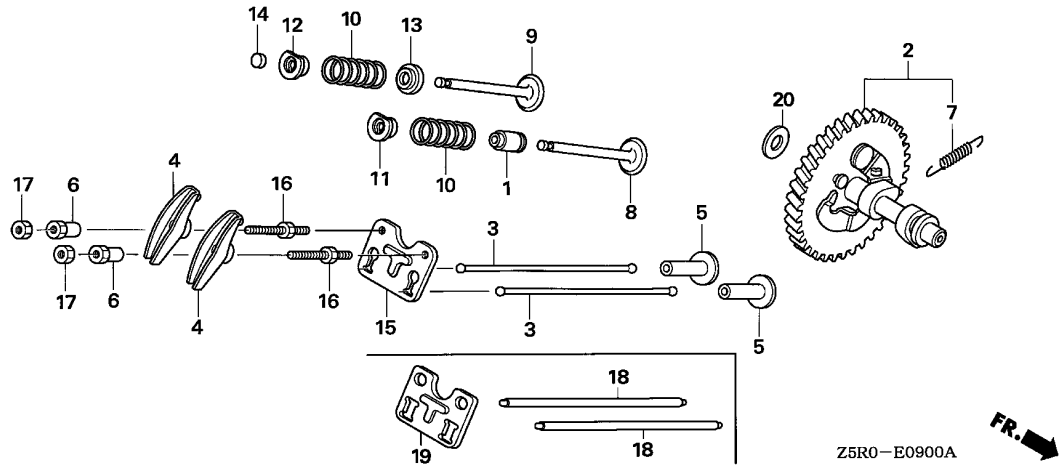

Ref. No.	L.O.N.	(Relative ref. Number) Description	F.R.T.

Ref. No.	Part No.	Description	Reqd. QTY GX 390 U1	GX 390 R1	GX 390 U2	GX 390 R2	Serial No.		Parts catalogue code
1	12209-ZE8-003	SEAL, VALVE STEM	1	1	1	1			
2	14100-ZF6-W01	CAMSHAFT ASSY.	1	1	-	-	--------	--------	ED6,EDD2,EDS2,EDS6,EDT6,EN6,ENT2,HA2,HJA2,LKE,LX2,LXE2,LXE4 LXE8,LXQ4,LXU,PA2,PAE2,PXE8,PXM8,PXU,PXU4,QA2,QA26,QAA2,QAE2 QAE6,QAW,QC2,QDW9,QE,QHB4,QK4,QKA4,QKB2,QMEO,QNB2,QND,QNE2 QNE6,QNE8,QNE9,QNK,QNR2,QNR6,QSC2,QTR2,QWA2,QWA4,QWC4,QWH2 QWT2,QXB,QXC4,QXC6,QXC9,QXE4,QXE6,QXE8,QXEB,QXQ4,QXS4,QXU,SCK4 SHQ4,SM32,SM34,SMC1,SMD3,SMEO,SME6,SMX2,SMX4,SNC,STC4,SWA4,SXB SXE4,SXE8,SXEB,SXQ4,SXU,VA2,VAA1,VAA8,VAC2,VAG2,VC2,VC2N,VCN2 VD2,VDB2,VDE2,VK2,VKB2,VKE4,VKX4,VM2,VMA2,VME2,VMS2,VNG1,VNG2 VPE4,VPE5,VPX4,VPX5,VSD,VSD4,VTH4,VWA2,VWC,VWE,VWS,VWT4,VX8 VXB,VXE2,VXE4,VXE6,VXE8,VXEB,VXG,VXG2,VXQ4
	14100-ZK6-870	.....	1	1	-	-	--------	--------	QXB7,QXE7,QXQ7,SXB7,SXE7,VEP7,VN17,VN27,VPE7,VPX7,VSD7,VWC7 VXB7,VXE7,VXP7
	14100-ZK6-880	.....	1	1	-	-	--------	--------	QXB9,QXE9,QXH9,SXB9,SXE9,VE39,VEP9,VKE9,VKX9,VNS9,VPE9,VPX9 VS39,VS49,VSD9,VWC9,VX39,VXB9,VXE9
	14100-Z5T-810	.....	-	-	1	1			
3	14410-ZE3-013	ROD, PUSH	2	2	2	2	--------	--------	ED6,EDD2,EDS2,EDS6,EDT6,EN6,ENT2,HA2,HJA2,LKE,LX2,LXE2,LXE4 LXE8,LXQ4,LXU,PA2,PAE2,PXE8,PXM8,PXU,PXU4,QA2,QA26,QAA2,QAE2 QAE6,QAW,QC2,QDW9,QE,QHB4,QK4,QKA4,QKB2,QMEO,QNB2,QND,QNE2 QNE6,QNE8,QNE9,QNK,QNR2,QNR6,QSC2,QTR2,QWA2,QWA4,QWC4,QWH2 QWT2,QXB,QXB7,QXC4,QXC6,QXC9,QXE4,QXE6,QXE7,QXE8,QXEB,QXQ4 QXQ7,QXS4,QXU,SCK4,SHQ4,SM32,SM34,SMC1,SMD3,SMEO,SME6,SMX2 SMX4,SNC,STC4,SWA4,SXB,SXB7,SXE4,SXE7,SXE8,SXEB,SXQ4,SXU,VA2 VAA1,VAA8,VAC2,VAG2,VC2,VC2N,VCN2,VD2,VDB2,VDE2,VEP7,VK2,VKB2 VKE4,VKX4,VM2,VMA2,VME2,VMS2,VN17,VN27,VNG1,VNG2,VPE4,VPE5 VPE7,VPX4,VPX5,VPX7,VSD,VSD4,VSD7,VTH4,VWA2,VWC,VWC7,VWE,VWS VWT4,VX8,VXB,VXB7,VXE2,VXE4,VXE6,VXE7,VXE8,VXEB,VXG,VXG2,VXP7 VXQ4
4	14431-ZE2-010	ARM, VALVE ROCKER	2	2	2	2			

Ref. No.	Part No.	Description	Reqd. QTY GX 390 U1	GX 390 R1	GX 390 U2	GX 390 R2	Serial No.	Parts catalogue code
5	14441-ZE2-000	LIFTER, VALVE	2	2	2	2		
6	14451-ZE1-013	PIVOT, ROCKER ARM	2	2	2	2		
7	14568-ZE1-000	SPRING, WEIGHT RETURN	1	1	1	1		
8	14711-ZE3-000	VALVE, IN.	1	1	-	-		
	14711-Z5T-000		-	-	1	1		
9	14721-ZE3-810	VALVE, EX.(STELLITE)	1	1	-	-	-------- --------	ED6,EDD2,EDS2,EDS6,EDT6,EN6,ENT2,VWS
	14721-ZE3-000	VALVE, EX.	1	1	-	-	-------- --------	HA2,HJA2,LKE,LX2,LXE2,LXE4,LXE8,LXQ4,LXU,PA2,PAE2,PXE8,PXM8 PXU,PXU4,QA2,QA26,QAA2,QAE2,QAE6,QAW,QC2,QDW9,QE,QHB4,QK4,QKA4 QKB2,QMEO,QNB2,QND,QNE2,QNE6,QNE8,QNE9,QNK,QNR2,QNR6,QSC2,QTR2 QWA2,QWA4,QWC4,QWH2,QWT2,QXB,QXB7,QXB9,QXC4,QXC6,QXC9,QXE4 QXE6,QXE7,QXE8,QXE9,QXEB,QXH9,QXQ4,QXQ7,QXS4,QXU,SCK4,SHQ4 SM32,SM34,SMC1,SMD3,SMEO,SME6,SMX2,SMX4,SNC,STC4,SWA4,SXB,SXB7 SXB9,SXE4,SXE7,SXE8,SXE9,SXEB,SXQ4,SXU,VA2,VAA1,VAA8,VAC2,VAG2 VC2,VC2N,VCN2,VD2,VDB2,VDE2,VE39,VEP7,VEP9,VK2,VKB2,VKE4,VKE9 VKX4,VKX9,VM2,VMA2,VME2,VMS2,VN17,VN27,VNG1,VNG2,VNS9,VPE4 VPE5,VPE7,VPE9,VPX4,VPX5,VPX7,VPX9,VS39,VS49,VSD,VSD4,VSD7 VSD9,VTH4,VWA2,VWC,VWC7,VWC9,VWE,VWT4,VX39,VX8,VXB,VXB7,VXB9 VXE2,VXE4,VXE6,VXE7,VXE8,VXE9,VXEB,VXG,VXG2,VXP7,VXQ4
	14721-Z5T-000		-	-	1	1	-------- --------	PXE8,PXM8,PXU,PXU4,QXE8,QXU,SM32,SM34,SMX2,SXE4
	14721-Z5T-800	VALVE, EX.(STELLITE)	-	-	-	1	-------- --------	ED6,EDD2,EDS6,EDT6,EN6,ENT2,VWS
10	14751-ZE2-003	SPRING, VALVE	2	2	2	2		
11	14771-ZE2-000	RETAINER, IN. VALVE SPRING	1	1	1	1		
12	14773-ZE2-000	RETAINER, EX. VALVE SPRING	1	1	-	-		
	14771-ZE2-000	RETAINER, IN. VALVE SPRING	-	-	1	1		
13	14775-ZE2-010	SEAT, VALVE SPRING	1	1	1	1		
14	14781-ZE2-000	ROTATOR, VALVE	1	1	-	-		
15	14791-ZE2-010	GUIDE, PUSH ROD	1	1	1	1	-------- --------	ED6,EDD2,EDS2,EDS6,EDT6,EN6,ENT2,HA2,HJA2,LKE,LX2,LXE2,LXE4 LXE8,LXQ4,LXU,PA2,PAE2,PXE8,PXM8,PXU,PXU4,QA2,QA26,QAA2,QAE2 QAE6,QAW,QC2,QDW9,QE,QHB4,QK4,QKA4,QKB2,QMEO,QNB2,QND,QNE2 QNE6,QNE8,QNE9,QNK,QNR2,QNR6,QSC2,QTR2,QWA2,QWA4,QWC4,QWH2 QWT2,QXB,QXB7,QXC4,QXC6,QXC9,QXE4,QXE6,QXE7,QXE8,QXEB,QXQ4 QXQ7,QXS4,QXU,SCK4,SHQ4,SM32,SM34,SMC1,SMD3,SMEO,SME6,SMX2 SMX4,SNC,STC4,SWA4,SXB,SXB7,SXE4,SXE7,SXE8,SXEB,SXQ4,SXU,VA2 VAA1,VAA8,VAC2,VAG2,VC2,VC2N,VCN2,VD2,VDB2,VDE2,VEP7,VK2,VKB2 VKE4,VKX4,VM2,VMA2,VME2,VMS2,VN17,VN27,VNG1,VNG2,VPE4,VPE5 VPE7,VPX4,VPX5,VPX7,VSD,VSD4,VSD7,VTH4,VWA2,VWC,VWC7,VWE,VWS VWT4,VX8,VXB,VXB7,VXE2,VXE4,VXE6,VXE7,VXE8,VXEB,VXG,VXG2,VXP7 VXQ4
16	90012-ZEO-010	BOLT, PIVOT, 8MM	2	2	2	2		
17	90206-ZE1-000	NUT, PIVOT ADJUSTING	2	2	2	2		
18	14410-ZK6-880	ROD COMP., PUSH	2	2	-	-	-------- --------	QXB9,QXE9,QXH9,SXB9,SXE9,VE39,VEP9,VKE9,VKX9,VNS9,VPE9,VPX9 VS39,VS49,VSD9,VWC9,VX39,VXB9,VXE9
19	14791-ZK6-880	GUIDE, PUSH ROD	1	1	-	-	-------- --------	QXB9,QXE9,QXH9,SXB9,SXE9,VE39,VEP9,VKE9,VKX9,VNS9,VPE9,VPX9 VS39,VS49,VSD9,VWC9,VX39,VXB9,VXE9
20	90413-ZK6-880	WASHER, THRUST, 16.1MM	1	1	-	-	-------- --------	QXB9,QXE9,QXH9,SXB9,SXE9,VE39,VEP9,VKE9,VKX9,VNS9,VPE9,VPX9 VS39,VS49,VSD9,VWC9,VX39,VXB9,VXE9

RECOIL STARTER

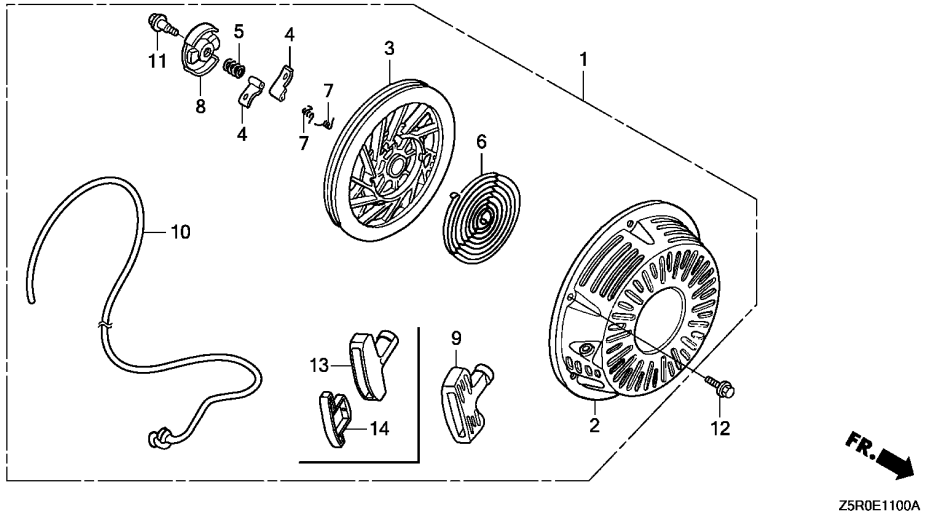

Ref. No.	L.O.N.	(Relative ref. Number) Description	F.R.T.

Ref. No.	Part No.	Description	Reqd. QTY GX 390 U1	GX 390 R1	GX 390 U2	GX 390 R2	Serial No.		Parts catalogue code
1	28400-ZE3-W01ZK	STARTER ASSY., RECOIL							
		T68.....TSURUMI BLUE	1	1	-	-	--------	--------	ED6,EDD2
	28400-ZE3-W01ZL	*Y131*.....LIGHTNING YELLOW	1	1	-	-	--------	--------	ED6,EDD2
	28400-ZE3-W01ZN	*T80*.....BAKELITE ORANGE	1	1	-	-	--------	--------	ED6,EDD2
	28400-ZE3-W01ZB	*NH1*.....BLACK	1	1	-	-	--------	--------	ED6,EDD2,EDS2,EDS6,EDT6,EN6,ENT2,PA2,PXE8,PXU,QA2,QAA2,QAE2 QC2,QDW9,QND,QNE9,QNR2,QWA4,QWC4,QWH2,QWT2,QXC9,QXQ4,QXS4,SM32 SME6,SMX2,SWA4,SXU,VC2,VC2N,VKE4,VKE9,VKX4,VKX9,VN27,VNG2,VNS9 VSD,VSD7,VSD9,VX39,VXB7,VXB9,VXEB
	28400-ZE3-W01ZP	*R280*.....POWER RED	1	1	-	-	--------	--------	ED6,EDD2,HA2,HJA2,LX2,LXE2,LXE4,LXE8,LXQ4,LXU,PA2,PAE2,PXE8 PXM8,PXU,QA2,QA26,QAA2,QAE2,QAE6,QAW,QDW9,QE,QHB4,QK4,QKA4 QKB2,QME0,QNB2,QND,QNE2,QNE6,QNE8,QNE9,QNK,QNR2,QNR6,QSC2,QWA4 QXB,QXB7,QXB9,QXC4,QXC6,QXC9,QXE4,QXE6,QXE7,QXE8,QXE9,QXEB QXH9,QXQ4,QXQ7,QXS4,QXU,SCK4,SHQ4,SM32,SMC1,SMD3,SME0,SME6,SNC STC4,SWA4,SXB,SXB7,SXB9,SXE4,SXE7,SXE8,SXE9,SXEB,SXQ4,SXU,VA2 VAA1,VAA8,VAC2,VAG2,VC2,VC2N,VCN2,VD2,VDB2,VDE2,VE39,VEP7,VEP9 VK2,VKB2,VMA2,VN17,VN27,VNG1,VPE4,VPE5,VPE7,VPE9,VPX4,VPX5 VPX7,VPX9,VS39,VS49,VSD,VSD4,VSD7,VSD9,VTH4,VWC9,VWT4,VX39,VX8 VXB,VXB7,VXB9,VXE2,VXE4,VXE6,VXE7,VXE8,VXE9,VXEB,VXG,VXG2,VXP7 VXQ4
	28400-ZE3-W01ZH	*NH105*...MAT BLACK (#15-#20)	1	1	-	-	--------	--------	QWA2,VDE2,VE39,VM2,VME2,VMS2,VWA2,VWC,VWC7,VWC9,VWE,VWS,VXE2 VXE7,VXE9,VXG
	28400-ZE3-W01ZD	*T39*.....GEKO BLUE	1	1	-	-	--------	--------	VNG1,VNG2,VXEB
	28400-ZE3-W02ZP	*R280*.....POWER RED	1	-	-	-	--------	--------	PXU4,SM34,SMX4
	28400-ZE3-W01ZC	*T34*.....SIMPSON BLUE	1	-	-	-	--------	--------	QA2
	28400-ZE3-W02ZB	*NH1*.....BLACK	1	-	-	-	--------	--------	SM34
	28400-Z5T-003ZB	*NH1*.....BLACK	-	-	1	1	--------	--------	ED6,EDD2,EDS6,EDT6,EN6,ENT2,PXE8,PXU,SM32,SM34,SMX2
	28400-Z5T-003ZA	*R280*.....POWER RED	-	-	1	1	--------	--------	ED6,EDD2,PXE8,PXM8,PXU,PXU4,QXE8,QXU,SM32,SM34,SXE4

Ref. No.	Part No.	Description	Reqd. QTY GX 390 U1	GX 390 R1	GX 390 U2	GX 390 R2	Serial No.		Parts catalogue code
2	28410-ZE3-W01ZB	CASE COMP., RECOIL STARTER *NH1*.....BLACK	1	1	1	1	--------	--------	ED6,EDD2,EDS2,EDS6,EDT6,EN6,ENT2,PA2,PXE8,PXU,QA2,QAA2,QAE2 QC2,QDW9,QND,QNE9,QNR2,QWA4,QWC4,QWH2,QWT2,QXC9,QXQ4,QXS4,SM32 SM34,SME6,SMX2,SWA4,SXU,VC2,VC2N,VKE4,VKE9,VKX4,VKX9,VN27,VNG2 VNS9,VSD,VSD7,VSD9,VX39,VXB7,VXB9,VXEB
	28410-ZE3-W01ZP	*R280*.....POWER RED	1	1	1	1	--------	--------	ED6,EDD2,HA2,HJA2,LX2,LXE2,LXE4,LXE8,LXQ4,LXU,PA2,PAE2,PXE8 PXM8,PXU,PXU4,QA2,QA26,QAA2,QAE2,QAE6,QAW,QDW9,QE,QHB4,QK4 QKA4,QKB2,QME0,QNB2,QND,QNE2,QNE6,QNE8,QNE9,QNK,QNR2,QNR6,QSC2 QWA4,QXB,QXB7,QXB9,QXC4,QXC6,QXC9,QXE4,QXE6,QXE7,QXE8,QXE9 QXEB,QXH9,QXQ4,QXQ7,QXS4,QXU,SCK4,SHQ4,SM32,SM34,SMC1,SMD3 SME0,SME6,SMX4,SNC,STC4,SWA4,SXB,SXB7,SXB9,SXE4,SXE7,SXE8,SXE9 SXEB,SXQ4,SXU,VA2,VAA1,VAA8,VAC2,VAG2,VC2,VC2N,VCN2,VD2,VDB2 VDE2,VE39,VEP7,VEP9,VK2,VKB2,VMA2,VN17,VN27,VNG1,VPE4,VPE5 VPE7,VPE9,VPX4,VPX5,VPX7,VPX9,VS39,VS49,VSD,VSD4,VSD7,VSD9 VTH4,VWC9,VWT4,VX39,VX8,VXB,VXB7,VXB9,VXE2,VXE4,VXE6,VXE7,VXE8 VXE9,VXEB,VXG,VXG2,VXP7,VXQ4
	28410-ZE3-W01ZK	*T68*.....TSURUMI BLUE	1	1	-	-	--------	--------	ED6,EDD2
	28410-ZE3-W01ZL	*Y131*.....LIGHTNING YELLOW	1	1	-	-	--------	--------	ED6,EDD2
	28410-ZE3-W01ZN	*T80*.....BAKELITE ORANGE	1	1	-	-	--------	--------	ED6,EDD2
	28410-ZE3-W01ZH	*NH105*...MAT BLACK (#15-#20)	1	1	-	-	--------	--------	QWA2,VDE2,VE39,VM2,VME2,VMS2,VWA2,VWC,VWC7,VWC9,VWE,VWS,VXE2 VXE7,VXE9,VXG
	28410-ZE3-W01ZE	*T39*.....GEKO BLUE	1	1	-	-	--------	--------	VNG1,VNG2,VXEB
	28410-ZE3-W01ZD	*T34*.....SIMPSON BLUE	1	-	-	-	--------	--------	QA2
3	28421-ZE3-W01	PULLEY, RECOIL STARTER	1	1	1	-	--------	--------	ED6,EDD2,EDS2,EDS6,EDT6,EN6,ENT2,HA2,HJA2,LX2,LXE2,LXE4,LXE8 LXQ4,LXU,PA2,PAE2,PXE8,PXM8,PXU,PXU4,QA2,QA26,QAA2,QAE2,QAE6 QAW,QC2,QDW9,QE,QHB4,QK4,QKA4,QKB2,QME0,QNB2,QND,QNE2,QNE6 QNE8,QNE9,QNK,QNR2,QNR6,QSC2,QWA2,QWA4,QWC4,QWH2,QWT2,QXB,QXB7 QXB9,QXC4,QXC6,QXC9,QXE4,QXE6,QXE7,QXE8,QXE9,QXEB,QXH9,QXQ4 QXQ7,QXS4,QXU,SCK4,SHQ4,SM32,SM34,SMC1,SMD3,SME0,SME6,SMX2 SMX4,SNC,STC4,SWA4,SXB,SXB7,SXB9,SXE4,SXE7,SXE8,SXE9,SXEB,SXQ4 SXU,VA2,VAA1,VAA8,VAC2,VAG2,VC2,VC2N,VCN2,VD2,VDB2,VDE2,VE39 VEP7,VEP9,VK2,VKB2,VKE4,VKE9,VKX4,VKX9,VM2,VMA2,VME2,VMS2,VN17 VN27,VNG1,VNG2,VNS9,VPE4,VPE5,VPE7,VPE9,VPX4,VPX5,VPX7,VPX9 VS39,VS49,VSD,VSD4,VSD7,VSD9,VTH4,VWA2,VWC,VWC7,VWC9,VWE,VWS VWT4,VX39,VX8,VXB,VXB7,VXB9,VXE2,VXE4,VXE6,VXE7,VXE8,VXE9,VXEB VXG,VXG2,VXP7,VXQ4
			-	-	-	1	--------	--------	ED6,EDD2,EDS6,EDT6,EN6,ENT2,PXM8
4	28422-ZE2-W01	RATCHET, STARTER	2	2	2	-	--------	--------	ED6,EDD2,EDS2,EDS6,EDT6,EN6,ENT2,HA2,HJA2,LX2,LXE2,LXE4,LXE8 LXQ4,LXU,PA2,PAE2,PXE8,PXM8,PXU,PXU4,QA2,QA26,QAA2,QAE2,QAE6 QAW,QC2,QDW9,QE,QHB4,QK4,QKA4,QKB2,QME0,QNB2,QND,QNE2,QNE6 QNE8,QNE9,QNK,QNR2,QNR6,QSC2,QWA2,QWA4,QWC4,QWH2,QWT2,QXB,QXB7 QXB9,QXC4,QXC6,QXC9,QXE4,QXE6,QXE7,QXE8,QXE9,QXEB,QXH9,QXQ4 QXQ7,QXS4,QXU,SCK4,SHQ4,SM32,SM34,SMC1,SMD3,SME0,SME6,SMX2 SMX4,SNC,STC4,SWA4,SXB,SXB7,SXB9,SXE4,SXE7,SXE8,SXE9,SXEB,SXQ4 SXU,VA2,VAA1,VAA8,VAC2,VAG2,VC2,VC2N,VCN2,VD2,VDB2,VDE2,VE39 VEP7,VEP9,VK2,VKB2,VKE4,VKE9,VKX4,VKX9,VM2,VMA2,VME2,VMS2,VN17 VN27,VNG1,VNG2,VNS9,VPE4,VPE5,VPE7,VPE9,VPX4,VPX5,VPX7,VPX9 VS39,VS49,VSD,VSD4,VSD7,VSD9,VTH4,VWA2,VWC,VWC7,VWC9,VWE,VWS VWT4,VX39,VX8,VXB,VXB7,VXB9,VXE2,VXE4,VXE6,VXE7,VXE8,VXE9,VXEB VXG,VXG2,VXP7,VXQ4
			-	-	-	2	--------	--------	ED6,EDD2,EDS6,EDT6,EN6,ENT2,PXM8

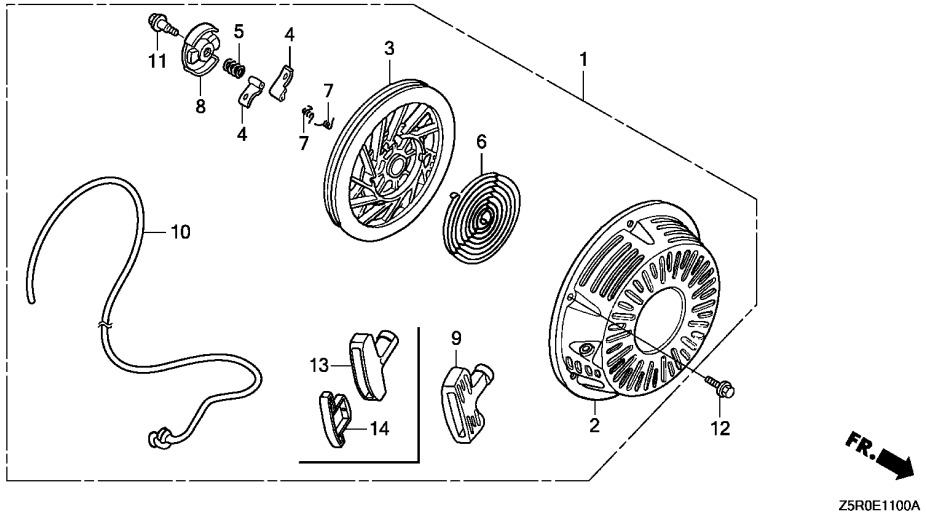

Ref. No.	Part No.	Description	Reqd. QTY GX 390 U1	GX 390 R1	GX 390 U2	GX 390 R2	Serial No.		Parts catalogue code
5	28441-ZE2-W01	SPRING, FRICTION ·····	1	1	1	-	--------	--------	ED6,EDD2,EDS2,EDS6,EDT6,EN6,ENT2,HA2,HJA2,LX2,LXE2,LXE4,LXE8 LXQ4,LXU,PA2,PAE2,PXE8,PXM8,PXU,PXU4,QA2,QA26,QAA2,QAE2,QAE6 QAW,QC2,QDW9,QE,QHB4,QK4,QKA4,QKB2,QMEO,QNB2,QND,QNE2,QNE6 QNE8,QNE9,QNK,QNR2,QNR6,QSC2,QWA2,QWA4,QWC4,QWH2,QWT2,QXB,QXB7 QXB9,QXC4,QXC6,QXC9,QXE4,QXE6,QXE7,QXE8,QXE9,QXEB,QXH9,QXQ4 QXQ7,QXS4,QXU,SCK4,SHQ4,SM32,SM34,SMC1,SMD3,SMEO,SME6,SMX2 SMX4,SNC,STC4,SWA4,SXB,SXB7,SXB9,SXE4,SXE7,SXE8,SXE9,SXEB,SXQ4 SXU,VA2,VAA1,VAA8,VAC2,VAG2,VC2,VC2N,VCN2,VD2,VDB2,VDE2,VE39 VEP7,VEP9,VK2,VKB2,VKE4,VKE9,VKX4,VKX9,VM2,VMA2,VME2,VMS2,VN17 VN27,VNG1,VNG2,VNS9,VPE4,VPE5,VPE7,VPE9,VPX4,VPX5,VPX7,VPX9 VS39,VS49,VSD,VSD4,VSD7,VSD9,VTH4,VWA2,VWC,VWC7,VWC9,VWE,VWS VWT4,VX39,VX8,VXB,VXB7,VXB9,VXE2,VXE4,VXE6,VXE7,VXE8,VXE9,VXEB VXG,VXG2,VXP7,VXQ4
			-	-	-	1	--------	--------	ED6,EDD2,EDS6,EDT6,EN6,ENT2,PXM8
6	28442-ZE2-W01	SPRING, STARTER RETURN ·····	1	1	1	-	--------	--------	ED6,EDD2,EDS2,EDS6,EDT6,EN6,ENT2,HA2,HJA2,LX2,LXE2,LXE4,LXE8 LXQ4,LXU,PA2,PAE2,PXE8,PXM8,PXU,PXU4,QA2,QA26,QAA2,QAE2,QAE6 QAW,QC2,QDW9,QE,QHB4,QK4,QKA4,QKB2,QMEO,QNB2,QND,QNE2,QNE6 QNE8,QNE9,QNK,QNR2,QNR6,QSC2,QWA2,QWA4,QWC4,QWH2,QWT2,QXB,QXB7 QXB9,QXC4,QXC6,QXC9,QXE4,QXE6,QXE7,QXE8,QXE9,QXEB,QXH9,QXQ4 QXQ7,QXS4,QXU,SCK4,SHQ4,SM32,SM34,SMC1,SMD3,SMEO,SME6,SMX2 SMX4,SNC,STC4,SWA4,SXB,SXB7,SXB9,SXE4,SXE7,SXE8,SXE9,SXEB,SXQ4 SXU,VA2,VAA1,VAA8,VAC2,VAG2,VC2,VC2N,VCN2,VD2,VDB2,VDE2,VE39 VEP7,VEP9,VK2,VKB2,VKE4,VKE9,VKX4,VKX9,VM2,VMA2,VME2,VMS2,VN17 VN27,VNG1,VNG2,VNS9,VPE4,VPE5,VPE7,VPE9,VPX4,VPX5,VPX7,VPX9 VS39,VS49,VSD,VSD4,VSD7,VSD9,VTH4,VWA2,VWC,VWC7,VWC9,VWE,VWS VWT4,VX39,VX8,VXB,VXB7,VXB9,VXE2,VXE4,VXE6,VXE7,VXE8,VXE9,VXEB VXG,VXG2,VXP7,VXQ4
			-	-	-	1	--------	--------	ED6,EDD2,EDS6,EDT6,EN6,ENT2,PXM8

Ref. No.	Part No.	Description	Reqd. QTY GX 390 U1	GX 390 R1	GX 390 U2	GX 390 R2	Serial No.		Parts catalogue code
7	28443-ZE2-W01	SPRING, RATCHET	2	2	2	-	--------	--------	ED6,EDD2,EDS2,EDS6,EDT6,EN6,ENT2,HA2,HJA2,LX2,LXE2,LXE4,LXE8 LXQ4,LXU,PA2,PAE2,PXE8,PXM8,PXU,PXU4,QA2,QA26,QAA2,QAE2,QAE6 QAW,QC2,QDW9,QE,QHB4,QK4,QKA4,QKB2,QMEO,QNB2,QND,QNE2,QNE6 QNE8,QNE9,QNK,QNR2,QNR6,QSC2,QWA2,QWA4,QWC4,QWH2,QWT2,QXB,QXB7 QXB9,QXC4,QXC6,QXC9,QXE4,QXE6,QXE7,QXE8,QXE9,QXEB,QXH9,QXQ4 QXQ7,QXS4,QXU,SCK4,SHQ4,SM32,SM34,SMC1,SMD3,SMEO,SME6,SMX2 SMX4,SNC,STC4,SWA4,SXB,SXB7,SXB9,SXE4,SXE7,SXE8,SXE9,SXEB,SXQ4 SXU,VA2,VAA1,VAA8,VAC2,VAG2,VC2,VC2N,VCN2,VD2,VDB2,VDE2,VE39 VEP7,VEP9,VK2,VKB2,VKE4,VKE9,VKX4,VKX9,VM2,VMA2,VME2,VMS2,VN17 VN27,VNG1,VNG2,VNS9,VPE4,VPE5,VPE7,VPE9,VPX4,VPX5,VPX7,VPX9 VS39,VS49,VSD,VSD4,VSD7,VSD9,VTH4,VWA2,VWC,VWC7,VWC9,VWE,VWS VWT4,VX39,VX8,VXB,VXB7,VXB9,VXE2,VXE4,VXE6,VXE7,VXE8,VXE9,VXEB VXG,VXG2,VXP7,VXQ4
			-	-	-	2	--------	--------	ED6,EDD2,EDS6,EDT6,EN6,ENT2,PXM8
8	28444-ZE2-W01	RETAINER, SPRING	1	1	1	-	--------	--------	ED6,EDD2,EDS2,EDS6,EDT6,EN6,ENT2,HA2,HJA2,LX2,LXE2,LXE4,LXE8 LXQ4,LXU,PA2,PAE2,PXE8,PXM8,PXU,PXU4,QA2,QA26,QAA2,QAE2,QAE6 QAW,QC2,QDW9,QE,QHB4,QK4,QKA4,QKB2,QMEO,QNB2,QND,QNE2,QNE6 QNE8,QNE9,QNK,QNR2,QNR6,QSC2,QWA2,QWA4,QWC4,QWH2,QWT2,QXB,QXB7 QXB9,QXC4,QXC6,QXC9,QXE4,QXE6,QXE7,QXE8,QXE9,QXEB,QXH9,QXQ4 QXQ7,QXS4,QXU,SCK4,SHQ4,SM32,SM34,SMC1,SMD3,SMEO,SME6,SMX2 SMX4,SNC,STC4,SWA4,SXB,SXB7,SXB9,SXE4,SXE7,SXE8,SXE9,SXEB,SXQ4 SXU,VA2,VAA1,VAA8,VAC2,VAG2,VC2,VC2N,VCN2,VD2,VDB2,VDE2,VE39 VEP7,VEP9,VK2,VKB2,VKE4,VKE9,VKX4,VKX9,VM2,VMA2,VME2,VMS2,VN17 VN27,VNG1,VNG2,VNS9,VPE4,VPE5,VPE7,VPE9,VPX4,VPX5,VPX7,VPX9 VS39,VS49,VSD,VSD4,VSD7,VSD9,VTH4,VWA2,VWC,VWC7,VWC9,VWE,VWS VWT4,VX39,VX8,VXB,VXB7,VXB9,VXE2,VXE4,VXE6,VXE7,VXE8,VXE9,VXEB VXG,VXG2,VXP7,VXQ4
			-	-	-	1	--------	--------	ED6,EDD2,EDS6,EDT6,EN6,ENT2,PXM8
9	28461-ZE2-W02	GRIP, STARTER	1	1	-	-	--------	--------	ED6,EDD2,EDS2,EDS6,EDT6,EN6,ENT2,HA2,HJA2,LX2,LXE2,LXE4,LXE8 LXQ4,LXU,PA2,PAE2,PXE8,PXM8,PXU,QA2,QA26,QAA2,QAE2,QAE6,QAW QC2,QDW9,QE,QHB4,QK4,QKA4,QKB2,QMEO,QNB2,QND,QNE2,QNE6,QNE8 QNE9,QNK,QNR2,QNR6,QSC2,QWA2,QWA4,QWC4,QWH2,QWT2,QXB,QXB7,QXB9 QXC4,QXC6,QXC9,QXE4,QXE6,QXE7,QXE8,QXE9,QXEB,QXH9,QXQ4,QXQ7 QXS4,QXU,SCK4,SHQ4,SM32,SMC1,SMD3,SMEO,SME6,SMX2,SNC,STC4,SWA4 SXB,SXB7,SXB9,SXE4,SXE7,SXE8,SXE9,SXEB,SXQ4,SXU,VA2,VAA1,VAA8 VAC2,VAG2,VC2,VC2N,VCN2,VD2,VDB2,VDE2,VE39,VEP7,VEP9,VK2,VKB2 VKE4,VKE9,VKX4,VKX9,VM2,VMA2,VME2,VMS2,VN17,VN27,VNG1,VNG2 VNS9,VPE4,VPE5,VPE7,VPE9,VPX4,VPX5,VPX7,VPX9,VS39,VS49,VSD VSD4,VSD7,VSD9,VTH4,VWA2,VWC,VWC7,VWC9,VWE,VWS,VWT4,VX39,VX8 VXB,VXB7,VXB9,VXE2,VXE4,VXE6,VXE7,VXE8,VXE9,VXEB,VXG,VXG2,VXP7 VXQ4
	28461-ZE2-W03	.....	1	-	-	-	--------	--------	PXU4,SM34,SMX4
10	28462-ZE3-W01	ROPE, RECOIL STARTER	1	1	1	-	--------	--------	ED6,EDD2,EDS2,EDS6,EDT6,EN6,ENT2,HA2,HJA2,LX2,LXE2,LXE4,LXE8 LXQ4,LXU,PA2,PAE2,PXE8,PXM8,PXU,PXU4,QA2,QA26,QAA2,QAE2,QAE6 QAW,QC2,QDW9,QE,QHB4,QK4,QKA4,QKB2,QMEO,QNB2,QND,QNE2,QNE6 QNE8,QNE9,QNK,QNR2,QNR6,QSC2,QWA2,QWA4,QWC4,QWH2,QWT2,QXB,QXB7 QXB9,QXC4,QXC6,QXC9,QXE4,QXE6,QXE7,QXE8,QXE9,QXEB,QXH9,QXQ4 QXQ7,QXS4,QXU,SCK4,SHQ4,SM32,SM34,SMC1,SMD3,SMEO,SME6,SMX2 SMX4,SNC,STC4,SWA4,SXB,SXB7,SXB9,SXE4,SXE7,SXE8,SXE9,SXEB,SXQ4 SXU,VA2,VAA1,VAA8,VAC2,VAG2,VC2,VC2N,VCN2,VD2,VDB2,VDE2,VE39 VEP7,VEP9,VK2,VKB2,VKE4,VKE9,VKX4,VKX9,VM2,VMA2,VME2,VMS2,VN17 VN27,VNG1,VNG2,VNS9,VPE4,VPE5,VPE7,VPE9,VPX4,VPX5,VPX7,VPX9 VS39,VS49,VSD,VSD4,VSD7,VSD9,VTH4,VWA2,VWC,VWC7,VWC9,VWE,VWS VWT4,VX39,VX8,VXB,VXB7,VXB9,VXE2,VXE4,VXE6,VXE7,VXE8,VXE9,VXEB VXG,VXG2,VXP7,VXQ4
			-	-	-	1	--------	--------	ED6,EDD2,EDS6,EDT6,EN6,ENT2,PXM8

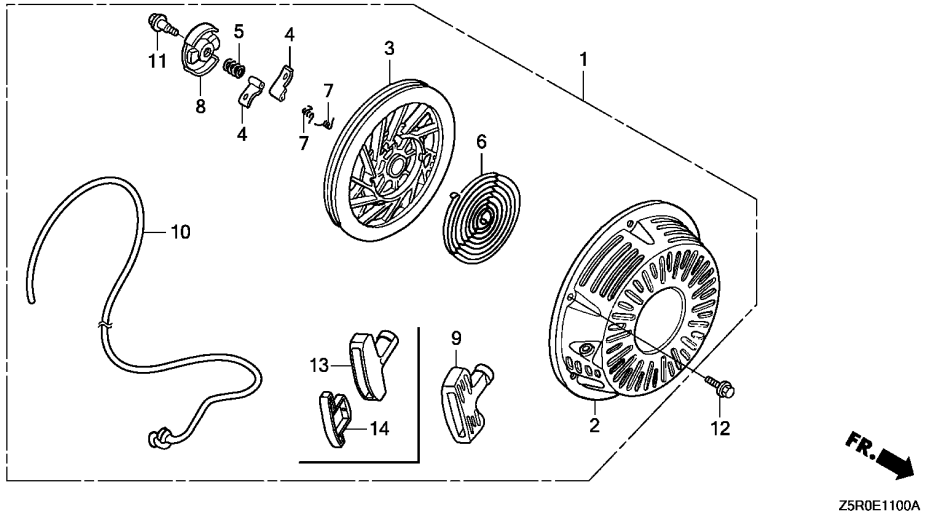

Ref. No.	Part No.	Description	Reqd. QTY GX 390 U1	GX 390 R1	GX 390 U2	GX 390 R2	Serial No.		Parts catalogue code
11	90004-ZE2-W01	SCREW, CENTER	1	1	1	-	--------	--------	ED6,EDD2,EDS2,EDS6,EDT6,EN6,ENT2,HA2,HJA2,LX2,LXE2,LXE4,LXE8 LXQ4,LXU,PA2,PAE2,PXE8,PXM8,PXU,PXU4,QA2,QA26,QAA2,QAE2,QAE6 QAW,QC2,QDW9,QE,QHB4,QK4,QKA4,QKB2,QME0,QNB2,QND,QNE2,QNE6 QNE8,QNE9,QNK,QNR2,QNR6,QSC2,QWA2,QWA4,QWC4,QWH2,QWT2,QXB,QXB7 QXB9,QXC4,QXC6,QXC9,QXE4,QXE6,QXE7,QXE8,QXE9,QXEB,QXH9,QXQ4 QXQ7,QXS4,QXU,SCK4,SHQ4,SM32,SM34,SMC1,SMD3,SME0,SME6,SMX2 SMX4,SNC,STC4,SWA4,SXB,SXB7,SXB9,SXE4,SXE7,SXE8,SXE9,SXEB,SXQ4 SXU,VA2,VAA1,VAA8,VAC2,VAG2,VC2,VC2N,VCN2,VD2,VDB2,VDE2,VE39 VEP7,VEP9,VK2,VKB2,VKE4,VKE9,VKX4,VKX9,VM2,VMA2,VME2,VMS2,VN17 VN27,VNG1,VNG2,VNS9,VPE4,VPE5,VPE7,VPE9,VPX4,VPX5,VPX7,VPX9 VS39,VS49,VSD,VSD4,VSD7,VSD9,VTH4,VWA2,VWC,VWC7,VWC9,VWE,VWS VWT4,VX39,VX8,VXB,VXB7,VXB9,VXE2,VXE4,VXE6,VXE7,VXE8,VXE9,VXEB VXG,VXG2,VXP7,VXQ4
			-	-	-	1	--------	--------	ED6,EDD2,EDS6,EDT6,EN6,ENT2,PXM8
12	90008-ZE2-003	BOLT, FLANGE, 6X10	3	3	3	-	--------	--------	ED6,EDD2,EDS2,EDS6,EDT6,EN6,ENT2,HA2,HJA2,LX2,LXE2,LXE4,LXE8 LXQ4,LXU,PA2,PAE2,PXE8,PXM8,PXU,PXU4,QA2,QA26,QAA2,QAE2,QAE6 QAW,QC2,QDW9,QE,QHB4,QK4,QKA4,QKB2,QME0,QNB2,QND,QNE2,QNE6 QNE8,QNE9,QNK,QNR2,QNR6,QSC2,QWA2,QWA4,QWC4,QWH2,QWT2,QXB,QXB7 QXB9,QXC4,QXC6,QXC9,QXE4,QXE6,QXE7,QXE8,QXE9,QXEB,QXH9,QXQ4 QXQ7,QXS4,QXU,SCK4,SHQ4,SM32,SM34,SMC1,SMD3,SME0,SME6,SMX2 SMX4,SNC,STC4,SWA4,SXB,SXB7,SXB9,SXE4,SXE7,SXE8,SXE9,SXEB,SXQ4 SXU,VA2,VAA1,VAA8,VAC2,VAG2,VC2,VC2N,VCN2,VD2,VDB2,VDE2,VE39 VEP7,VEP9,VK2,VKB2,VKE4,VKE9,VKX4,VKX9,VM2,VMA2,VME2,VMS2,VN17 VN27,VNG1,VNG2,VNS9,VPE4,VPE5,VPE7,VPE9,VPX4,VPX5,VPX7,VPX9 VS39,VS49,VSD,VSD4,VSD7,VSD9,VTH4,VWA2,VWC,VWC7,VWC9,VWE,VWS VWT4,VX39,VX8,VXB,VXB7,VXB9,VXE2,VXE4,VXE6,VXE7,VXE8,VXE9,VXEB VXG,VXG2,VXP7,VXQ4
			-	-	-	3	--------	--------	ED6,EDD2,EDS6,EDT6,EN6,ENT2,PXM8

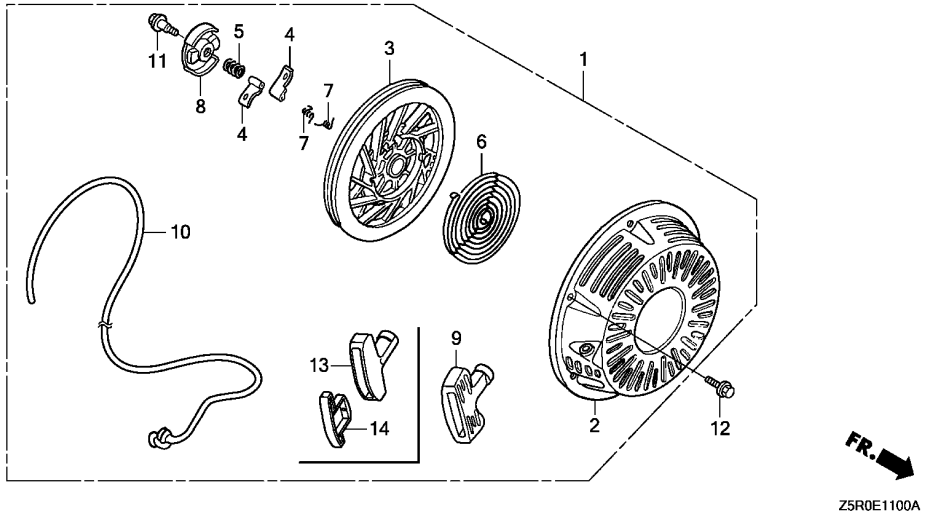

Ref. No.	Part No.	Description	Reqd. QTY GX 390 U1	GX 390 R1	GX 390 U2	GX 390 R2	Serial No.		Parts catalogue code
13	28461-Z5T-003	GRIP, STARTER	-	-	1	1	--------	--------	ED6,EDD2,EDS6,EDT6,EN6,ENT2,PXE8,PXM8,PXU,PXU4,QXE8,QXU,SM32 SM34,SMX2,SXE4
14	28463-Z5T-003	GRIP, REINFORCEMENT	-	-	1	1	--------	--------	ED6,EDD2,EDS6,EDT6,EN6,ENT2,PXE8,PXM8,PXU,PXU4,QXE8,QXU,SM32 SM34,SMX2,SXE4

FAN COVER

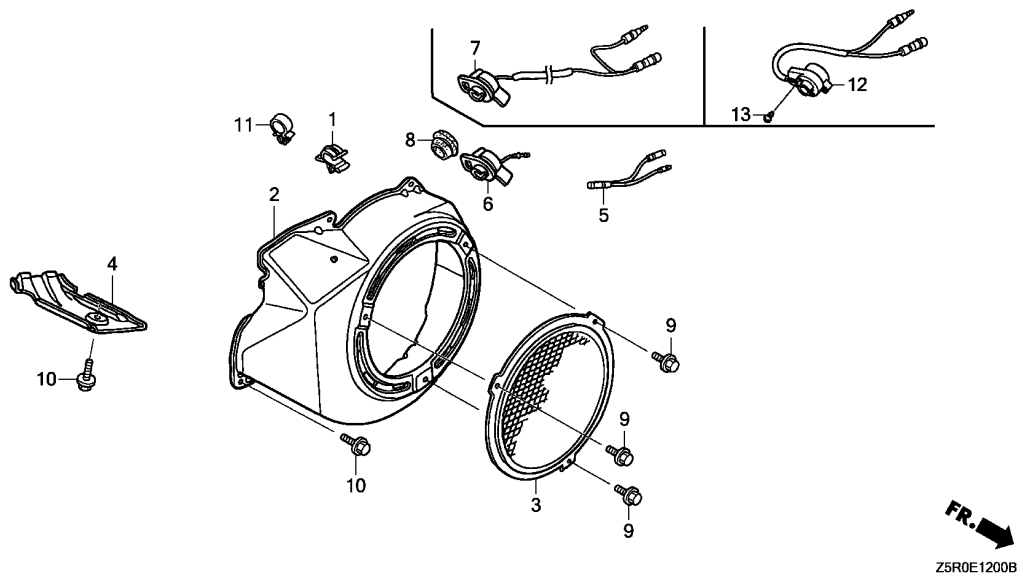

Ref. No.	L.O.N.	(Relative ref. Number) Description	F.R.T.

Ref. No.	Part No.	Description	Reqd. QTY GX 390 U1	GX 390 R1	GX 390 U2	GX 390 R2	Serial No.		Parts catalogue code
1	16731-ZE2-003	CLIP, TUBE	1	1	1	1	--------	--------	HA2,HJA2,LKE,LX2,LXE2,LXE4,LXE8,LXQ4,LXU,PA2,PAE2,PXE8,PXM8 PXU,PXU4,QA2,QA26,QAA2,QAE2,QAE6,QAW,QC2,QDW9,QE,QHB4,QK4,QKA4 QKB2,QME0,QNB2,QND,QNE2,QNE6,QNE8,QNE9,QNK,QNR2,QNR6,QSC2,QTR2 QWA2,QWA4,QWC4,QWH2,QWT2,QXB,QXB7,QXB9,QXC4,QXC6,QXC9,QXE4 QXE6,QXE7,QXE8,QXE9,QXEB,QXH9,QXQ4,QXQ7,QXS4,QXU,SCK4,SHQ4 SM32,SM34,SMC1,SMD3,SME0,SME6,SMX2,SMX4,SNC,STC4,SWA4,SXB,SXB7 SXB9,SXE4,SXE7,SXE8,SXE9,SXEB,SXQ4,SXU,VA2,VAC2,VAG2,VC2,VC2N VCN2,VD2,VDB2,VDE2,VE39,VEP7,VEP9,VK2,VKB2,VKE4,VKE9,VKX4,VKX9 VM2,VMA2,VME2,VMS2,VN17,VN27,VNG1,VNG2,VNS9,VPE4,VPE5,VPE7 VPE9,VPX4,VPX5,VPX7,VPX9,VS39,VS49,VSD,VSD4,VSD7,VSD9,VTH4 VWA2,VWC,VWC7,VWC9,VWE,VWT4,VX39,VX8,VXB,VXB7,VXB9,VXE2,VXE4 VXE6,VXE7,VXE8,VXE9,VXEB,VXG,VXG2,VXP7,VXQ4
2	19610-ZE3-700ZF	COVER COMP., FAN							
		T68.....TSURUMI BLUE	1	1	-	-	--------	--------	ED6,EDD2
	19610-ZE3-700ZG	*Y131*.....LIGHTNING YELLOW	1	1	-	-	--------	--------	ED6,EDD2
	19610-ZE3-700ZJ	*T80*.....BAKELITE ORANGE	1	1	-	-	--------	--------	ED6,EDD2
	19610-ZE3-700ZK	*R280*.....POWER RED	1	1	-	-	--------	--------	ED6,EDD2
	19610-ZE3-700ZB	*NH1*.....BLACK	1	1	-	-	--------	--------	ED6,EDD2,EDS2,EDS6,EDT6,EN6,ENT2
	19610-ZE3-010ZL	*R280*.....POWER RED	1	1	-	-	--------	--------	HA2,HJA2,LKE,LX2,LXE2,LXE4,LXE8,LXQ4,LXU,PA2,PAE2,PXE8,PXM8 PXU,PXU4,QA2,QA26,QAA2,QAE2,QAE6,QAW,QDW9,QE,QHB4,QK4,QKA4 QKB2,QME0,QNB2,QND,QNE2,QNE6,QNE8,QNE9,QNK,QNR2,QNR6,QSC2,QTR2 QWA4,QXC4,QXC6,QXC9,QXE4,QXE6,QXE8,QXQ4,QXQ7,QXS4,QXU,SHQ4 SM32,SM34,SMC1,SMD3,SME0,SME6,SMX4,SNC,STC4,SWA4,SXE4,SXE8 SXQ4,SXU,VA2,VAA1,VAA8,VAC2,VAG2,VC2,VC2N,VCN2,VD2,VDB2,VDE2 VK2,VKB2,VMA2,VX8,VXE2,VXE4,VXE6,VXE8,VXG,VXQ4
	19610-ZE3-010ZB	*NH1*.....BLACK	1	1	-	-	--------	--------	PA2,PXE8,PXU,QA2,QAA2,QAE2,QC2,QDW9,QND,QNR2,QWA4,QWC4,QWH2 QWT2,QXC9,QXQ4,QXS4,SM32,SM34,SME6,SMX2,SWA4,SXU,VC2,VC2N
	19610-ZE3-010ZG	*NH105*...MAT BLACK (#15-#20)	1	1	-	-	--------	--------	QWA2,VDE2,VM2,VME2,VMS2,VWA2,VWC,VWE,VXE2,VXG

E-12 FAN COVER

G 4

Ref. No.	Part No.	Description	Reqd. QTY GX 390 U1	GX 390 R1	GX 390 U2	GX 390 R2	Serial No.		Parts catalogue code
(2)	19610-ZE3-W02ZF	COVER COMP., FAN							
		R280.....POWER RED	1	1	-	-	--------	--------	QXB,QXB7,QXB9,QXE7,QXE9,QXEB,QXH9,SCK4,SXB,SXB7,SXB9,SXE7,SXE9 SXEB,VE39,VEP7,VEP9,VN17,VN27,VNG1,VPE4,VPE5,VPE7,VPE9,VPX4 VPX5,VPX7,VPX9,VS39,VS49,VSD,VSD4,VSD7,VSD9,VTH4,VWC9,VWT4 VX39,VXB,VXB7,VXB9,VXE7,VXE9,VXEB,VXG2,VXP7
	19610-ZE3-W02ZE	*NH105*...MAT BLACK (#15-#20)	1	1	-	-	--------	--------	VE39,VWC7,VWC9,VXE7,VXE9
	19610-ZE3-W02ZD	*NH1*.....BLACK	1	1	-	-	--------	--------	VKE4,VKE9,VKX4,VKX9,VN27,VNG2,VNS9,VSD,VSD7,VSD9,VX39,VXB7 VXB9,VXEB
	19610-ZE3-W02ZB	*T39*.....GEKO BLUE	1	1	-	-	--------	--------	VNG1,VNG2,VXEB
	19610-ZE3-700ZL	*NH105*...MAT BLACK (#15-#20)	1	1	-	-	--------	--------	VWS
	19610-ZE3-010ZC	*T34*.....SIMPSON BLUE	1	-	-	-	--------	--------	QA2
	19610-ZE3-010ZH	*NH246*.....LOOSEY GRAY	1	-	-	-	--------	--------	QNE9
	19610-Z5T-000ZA	*R280*.....POWER RED	-	-	1	1	--------	--------	PXE8,PXM8,PXU,PXU4,QXE8,QXU,SM32,SM34,SXE4
	19610-Z5T-000ZB	*NH1*.....BLACK	-	-	1	-	--------	--------	PXE8,PXU,SM32,SM34,SMX2
	19610-Z5T-800	.....	-	-	-	1	--------	--------	ED6,EDD2,EDS6,EDT6,EN6,ENT2,VWS
3	19620-ZE3-811	PROTECTOR COMP., FAN COVER ..	1	-	-	-	--------	--------	LKE,QTR2
4	19631-ZE3-W00	SHROUD	1	1	-	-			
	19631-Z5T-000	.....	-	-	1	1			
5	32197-ZH8-003	SUB HARNESS	1	1	-	-	--------	--------	ED6,EDD2,EDS2,EDS6,EDT6,EN6,ENT2,VAA1,VDB2,VEP9
6	35120-Z0D-V81	SWITCH ASSY., ENGINE STOP ...	1	-	-	-	--------	--------	QE,QNK,SHQ4,SMC1
7	36100-ZF6-P82	SWITCH ASSY., ENGINE STOP ...	1	-	-	-	--------	--------	PXU4,SMX4
	36100-ZF6-P81	.....	1	-	-	-	--------	1412956	HA2,HJA2,LX2,LXQ4,LXU,PA2,PXU,QA2,QA26,QAA2,QAW,QC2,QDW9,QK4 QWA4,QWC4,QWT2,QXB,QXB7,QXB9,QXC4,QXC6,QXC9,QXQ4,QXQ7,QXS4,QXU SMD3,SME6,SMX2,SNC,SWA4,SXB,SXB7,SXB9,SXQ4,SXU,VA2,VAC2,VAG2 VD2,VM2,VMA2,VN17,VNG1,VPX5,VPX9,VSD,VSD7,VSD9,VWC7,VWC9,VX39 VX8,VXB,VXB7,VXB9,VXG,VXP7,VXQ4
	36100-ZF6-P82	.....	1	-	-	-	1412957	--------	HA2,HJA2,LX2,LXQ4,LXU,PA2,PXU,QA2,QA26,QAA2,QAW,QC2,QDW9,QK4 QWA4,QWC4,QWT2,QXB,QXB7,QXB9,QXC4,QXC6,QXC9,QXQ4,QXQ7,QXS4,QXU SMD3,SME6,SMX2,SNC,SWA4,SXB,SXB7,SXB9,SXQ4,SXU,VA2,VAC2,VAG2 VD2,VM2,VMA2,VN17,VNG1,VPX5,VPX9,VSD,VSD7,VSD9,VWC7,VWC9,VX39 VX8,VXB,VXB7,VXB9,VXG,VXP7,VXQ4
			-	1	-	-	--------	--------	VAC2,VAG2,VD2,VN17,VNG1,VPX5,VPX9,VWC7,VWC9,VXG
8	81329-567-020	GROMMET, DRAIN HOLE	1	1	1	1	--------	--------	ED6,EDD2,EDS2,EDS6,EDT6,EN6,ENT2,LKE,LXE2,LXE4,LXE8,PAE2,PXE8 PXM8,QAE2,QAE6,QHB4,QKA4,QKB2,QME0,QNB2,QND,QNE2,QNE6,QNE8 QNE9,QNR2,QNR6,QSC2,QTR2,QWA2,QWH2,QXE4,QXE6,QXE7,QXE8,QXE9 QXEB,QXH9,SCK4,SM32,SM34,SME0,STC4,SXE4,SXE7,SXE8,SXE9,SXEB VAA1,VAA8,VC2,VC2N,VCN2,VDB2,VDE2,VE39,VEP7,VEP9,VK2,VKB2,VKE4 VKE9,VKX4,VKX9,VME2,VMS2,VN27,VNG2,VNS9,VPE4,VPE5,VPE7,VPE9 VPX4,VPX7,VS39,VS49,VSD4,VTH4,VWA2,VWC,VWE,VWS,VWT4,VXE2,VXE4 VXE6,VXE7,VXE8,VXE9,VXEB,VXG2
9	90008-ZE2-003	BOLT, FLANGE, 6X10	3	-	-	-	--------	--------	LKE,QTR2
10	90013-883-000	BOLT, FLANGE, 6X12(CT200) ...	6	6	6	6			
11	90654-SA4-003	CLIP, WIRE HARNESS, 6MM(WHITE)	2	2	-	2	--------	--------	ED6,EDD2,EDS2,EDS6,EDT6,EN6,ENT2,VWS
12	35120-Z5T-003	SWITCH ASSY., ENGINE STOP ...	-	-	1	-	--------	--------	PXU,PXU4,QXU,SMX2
13	90004-Z5T-000	SCREW, TAPPING, 3X6(P0)	-	-	2	-	--------	--------	PXU,PXU4,QXU,SMX2

2

CARBURETOR(1)

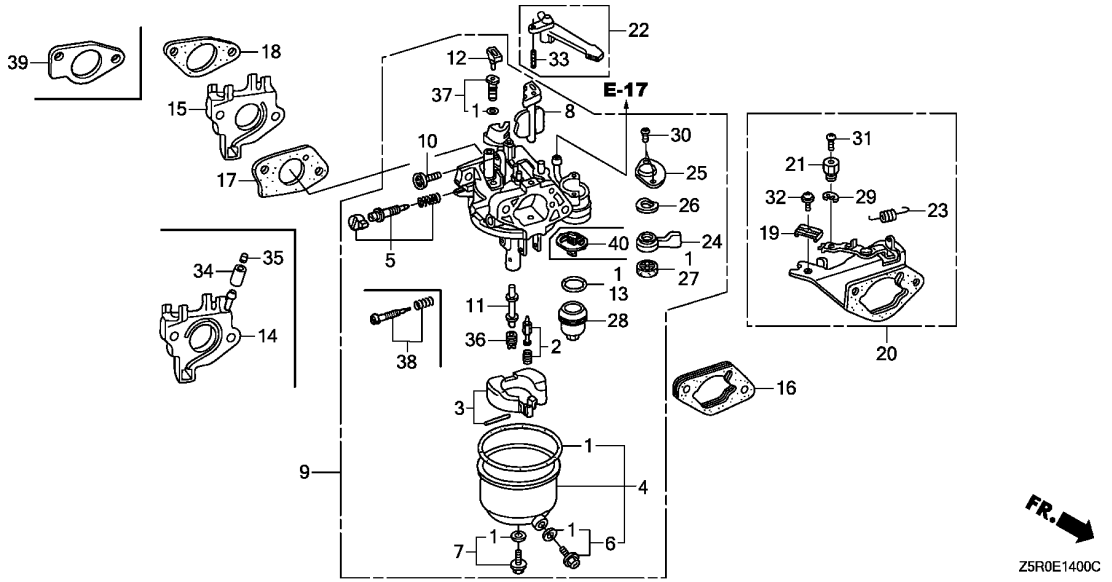

Ref. No.	L.O.N.	(Relative ref. Number) Description	F.R.T.

Ref. No.	Part No.	Description	Reqd. QTY GX 390 U1	GX 390 R1	GX 390 U2	GX 390 R2	Serial No.		Parts catalogue code
1	16010-ZE2-812	GASKET SET ----------	1	1	1	1	--------	--------	HA2,HJA2,LKE,LX2,LXE2,LXE4,LXE8,LXQ4,LXU,PA2,PAE2,PXE8,PXM8 PXU,PXU4,QA2,QA26,QAA2,QAE2,QAE6,QAW,QC2,QDW9,QE,QHB4,QK4,QKA4 QKB2,QME0,QNB2,QND,QNE2,QNE6,QNE8,QNE9,QNK,QNR2,QNR6,QSC2,QTR2 QWA2,QWA4,QWC4,QWH2,QWT2,QXB,QXB7,QXB9,QXC4,QXC6,QXC9,QXE4 QXE6,QXE7,QXE8,QXE9,QXEB,QXH9,QXQ4,QXQ7,QXS4,QXU,SCK4,SHQ4 SM32,SM34,SMC1,SMD3,SME0,SME6,SMX2,SMX4,SNC,STC4,SWA4,SXB,SXB7 SXB9,SXE4,SXE7,SXE8,SXE9,SXEB,SXQ4,SXU,VA2,VAC2,VAG2,VCN2,VD2 VDB2,VDE2,VEP7,VK2,VKB2,VM2,VMA2,VME2,VN17,VN27,VNG1,VNG2,VNS9 VSD,VSD7,VSD9,VWA2,VWC7,VWC9,VWT4,VX8,VXB,VXB7,VXB9,VXE2,VXE4 VXE6,VXE7,VXE8,VXE9,VXEB,VXP7,VXQ4
2	16011-ZA0-931	VALVE SET, FLOAT ----------	1	1	1	1	--------	--------	HA2,HJA2,LKE,LX2,LXE2,LXE4,LXE8,LXQ4,LXU,PA2,PAE2,PXE8,PXM8 PXU,PXU4,QA2,QA26,QAA2,QAE2,QAE6,QAW,QC2,QDW9,QE,QHB4,QK4,QKA4 QKB2,QME0,QNB2,QND,QNE2,QNE6,QNE8,QNE9,QNK,QNR2,QNR6,QSC2,QTR2 QWA2,QWA4,QWC4,QWH2,QWT2,QXB,QXB7,QXB9,QXC4,QXC6,QXC9,QXE4 QXE6,QXE7,QXE8,QXE9,QXEB,QXH9,QXQ4,QXQ7,QXS4,QXU,SCK4,SHQ4 SM32,SM34,SMC1,SMD3,SME0,SME6,SMX2,SMX4,SNC,STC4,SWA4,SXB,SXB7 SXB9,SXE4,SXE7,SXE8,SXE9,SXEB,SXQ4,SXU,VA2,VAC2,VAG2,VCN2,VD2 VDB2,VDE2,VEP7,VK2,VKB2,VM2,VMA2,VME2,VN17,VN27,VNG1,VNG2,VNS9 VSD,VSD7,VSD9,VWA2,VWC7,VWC9,VWT4,VX8,VXB,VXB7,VXB9,VXE2,VXE4 VXE6,VXE7,VXE8,VXE9,VXEB,VXP7,VXQ4

Ref. No.	Part No.	Description	Reqd. QTY GX 390 U1	GX 390 R1	GX 390 U2	GX 390 R2	Serial No.	Parts catalogue code
3	16013-ZA0-931	FLOAT SET	1	1	-	-	-------- --------	HA2,HJA2,LKE,LX2,LXE2,LXE4,LXE8,LXQ4,LXU,PA2,PAE2,PXE8,PXM8 PXU,PXU4,QA2,QA26,QAA2,QAE2,QAE6,QAW,QC2,QDW9,QE,QHB4,QK4,QKA4 QKB2,QME0,QNB2,QND,QNE2,QNE6,QNE8,QNE9,QNK,QNR2,QNR6,QSC2,QTR2 QWA2,QWA4,QWC4,QWH2,QWT2,QXB,QXB7,QXB9,QXC4,QXC6,QXC9,QXE4 QXE6,QXE7,QXE8,QXE9,QXEB,QXH9,QXQ4,QXQ7,QXS4,QXU,SCK4,SHQ4 SM32,SM34,SMC1,SMD3,SME0,SME6,SMX2,SMX4,SNC,STC4,SWA4,SXB,SXB7 SXB9,SXE4,SXE7,SXE8,SXE9,SXEB,SXQ4,SXU,VA2,VAC2,VAG2,VCN2,VD2 VDB2,VDE2,VEP7,VK2,VKB2,VM2,VMA2,VME2,VN17,VN27,VNG1,VNG2,VNS9 VSD,VSD7,VSD9,VWA2,VWC7,VWC9,VWT4,VX8,VXB,VXB7,VXB9,VXE2,VXE4 VXE6,VXE7,VXE8,VXE9,VXEB,VXP7,VXQ4
	16013-Z1C-003		-	-	1	1	-------- --------	PXE8,PXM8,PXU,PXU4,QXE8,QXU,SM32,SM34,SMX2,SXE4
4	16015-ZE8-005	CHAMBER SET, FLOAT	1	1	-	-	-------- --------	HA2,HJA2,LKE,LX2,LXE2,LXE4,LXE8,LXQ4,LXU,PA2,PAE2,PXE8,PXM8 PXU,PXU4,QA2,QA26,QAA2,QAE2,QAE6,QAW,QC2,QDW9,QE,QHB4,QK4,QKA4 QKB2,QME0,QNB2,QND,QNE2,QNE6,QNE8,QNE9,QNK,QNR2,QNR6,QSC2,QTR2 QWA2,QWA4,QWC4,QWH2,QWT2,QXB,QXB7,QXB9,QXC4,QXC6,QXC9,QXE4 QXE6,QXE7,QXE8,QXE9,QXEB,QXH9,QXQ4,QXQ7,QXS4,QXU,SCK4,SHQ4 SM32,SM34,SMC1,SMD3,SME0,SME6,SMX2,SMX4,SNC,STC4,SWA4,SXB,SXB7 SXB9,SXE4,SXE7,SXE8,SXE9,SXEB,SXQ4,SXU,VA2,VAC2,VAG2,VCN2,VD2 VDB2,VDE2,VEP7,VK2,VKB2,VM2,VMA2,VME2,VN17,VN27,VNG1,VNG2,VNS9 VSD,VSD7,VSD9,VWA2,VWC7,VWC9,VWT4,VX8,VXB,VXB7,VXB9,VXE2,VXE4 VXE6,VXE7,VXE8,VXE9,VXEB,VXP7,VXQ4
	16015-Z5T-901		-	-	1	1	-------- --------	PXE8,PXM8,PXU,PXU4,QXE8,QXU,SM32,SM34,SMX2,SXE4
5	16016-ZH7-W01	SCREW SET, PILOT	1	1	-	-	-------- --------	HA2,HJA2,LKE,LX2,LXE2,LXE4,LXE8,LXQ4,LXU,PA2,PAE2,PXE8,PXM8 PXU,PXU4,QA2,QA26,QAA2,QAE2,QAE6,QAW,QC2,QDW9,QE,QHB4,QK4,QKA4 QKB2,QME0,QNB2,QND,QNE2,QNE6,QNE8,QNE9,QNK,QNR2,QNR6,QSC2,QTR2 QWA2,QWA4,QWC4,QWH2,QWT2,QXB,QXB7,QXB9,QXC4,QXC6,QXC9,QXE4 QXE6,QXE7,QXE8,QXE9,QXEB,QXH9,QXQ4,QXQ7,QXS4,QXU,SCK4,SHQ4 SM32,SM34,SMC1,SMD3,SME0,SME6,SMX2,SMX4,SNC,STC4,SWA4,SXB,SXB7 SXB9,SXE4,SXE7,SXE8,SXE9,SXEB,SXQ4,SXU,VA2,VAC2,VAG2,VCN2,VD2 VDB2,VDE2,VEP7,VK2,VKB2,VM2,VMA2,VME2,VN17,VN27,VNG1,VNG2,VNS9 VSD,VSD7,VSD9,VWA2,VWC7,VWC9,VWT4,VX8,VXB,VXB7,VXB9,VXE2,VXE4 VXE6,VXE7,VXE8,VXE9,VXEB,VXP7,VXQ4
6	16024-ZE1-811	SCREW SET, DRAIN	1	1	-	-	-------- --------	HA2,HJA2,LKE,LX2,LXE2,LXE4,LXE8,LXQ4,LXU,PA2,PAE2,PXE8,PXM8 PXU,PXU4,QA2,QA26,QAA2,QAE2,QAE6,QAW,QC2,QDW9,QE,QHB4,QK4,QKA4 QKB2,QME0,QNB2,QND,QNE2,QNE6,QNE8,QNE9,QNK,QNR2,QNR6,QSC2,QTR2 QWA2,QWA4,QWC4,QWH2,QWT2,QXB,QXB7,QXB9,QXC4,QXC6,QXC9,QXE4 QXE6,QXE7,QXE8,QXE9,QXEB,QXH9,QXQ4,QXQ7,QXS4,QXU,SCK4,SHQ4 SM32,SM34,SMC1,SMD3,SME0,SME6,SMX2,SMX4,SNC,STC4,SWA4,SXB,SXB7 SXB9,SXE4,SXE7,SXE8,SXE9,SXEB,SXQ4,SXU,VA2,VAC2,VAG2,VCN2,VD2 VDB2,VDE2,VEP7,VK2,VKB2,VM2,VMA2,VME2,VN17,VN27,VNG1,VNG2,VNS9 VSD,VSD7,VSD9,VWA2,VWC7,VWC9,VWT4,VX8,VXB,VXB7,VXB9,VXE2,VXE4 VXE6,VXE7,VXE8,VXE9,VXEB,VXP7,VXQ4
	16024-Z5T-901		-	-	1	1	-------- --------	PXE8,PXM8,PXU,PXU4,QXE8,QXU,SM32,SM34,SMX2,SXE4
7	16028-ZE0-005	SCREW SET	1	1	-	-	-------- --------	HA2,HJA2,LKE,LX2,LXE2,LXE4,LXE8,LXQ4,LXU,PA2,PAE2,PXE8,PXM8 PXU,PXU4,QA2,QA26,QAA2,QAE2,QAE6,QAW,QC2,QDW9,QE,QHB4,QK4,QKA4 QKB2,QME0,QNB2,QND,QNE2,QNE6,QNE8,QNE9,QNK,QNR2,QNR6,QSC2,QTR2 QWA2,QWA4,QWC4,QWH2,QWT2,QXB,QXB7,QXB9,QXC4,QXC6,QXC9,QXE4 QXE6,QXE7,QXE8,QXE9,QXEB,QXH9,QXQ4,QXQ7,QXS4,QXU,SCK4,SHQ4 SM32,SM34,SMC1,SMD3,SME0,SME6,SMX2,SMX4,SNC,STC4,SWA4,SXB,SXB7 SXB9,SXE4,SXE7,SXE8,SXE9,SXEB,SXQ4,SXU,VA2,VAC2,VAG2,VCN2,VD2 VDB2,VDE2,VEP7,VK2,VKB2,VM2,VMA2,VME2,VN17,VN27,VNG1,VNG2,VNS9 VSD,VSD7,VSD9,VWA2,VWC7,VWC9,VWT4,VX8,VXB,VXB7,VXB9,VXE2,VXE4 VXE6,VXE7,VXE8,VXE9,VXEB,VXP7,VXQ4
	16028-Z5T-901		-	-	1	1	-------- --------	PXE8,PXM8,PXU,PXU4,QXE8,QXU,SM32,SM34,SMX2,SXE4

2

CARBURETOR(1)

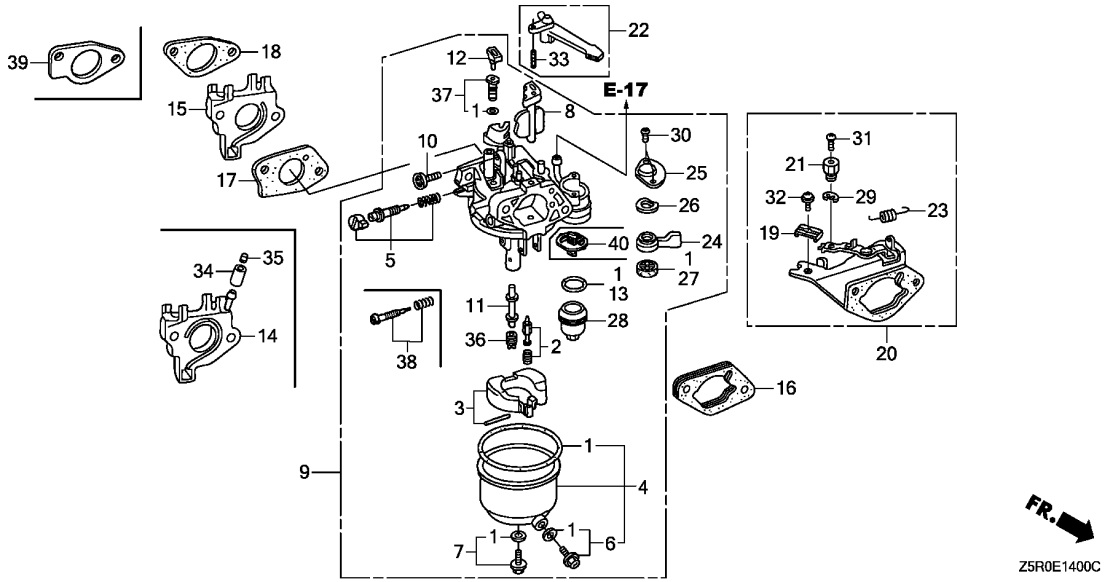

Ref. No.	Part No.	Description	Reqd. QTY GX 390 U1	GX 390 R1	GX 390 U2	GX 390 R2	Serial No.		Parts catalogue code
8	16044-ZE3-W20	CHOKE SET	1	1	-	-	--------	--------	HA2,HJA2,LKE,LX2,LXE2,LXE4,LXE8,LXQ4,LXU,PA2,PAE2,PXE8,PXM8 PXU,PXU4,QA2,QA26,QAA2,QAE2,QAE6,QAW,QC2,QDW9,QE,QHB4,QK4,QKA4 QKB2,QME0,QNB2,QND,QNE2,QNE6,QNE8,QNE9,QNK,QNR2,QNR6,QSC2,QTR2 QWA2,QWA4,QWC4,QWH2,QWT2,QXB,QXB7,QXB9,QXC4,QXC6,QXC9,QXE4 QXE6,QXE7,QXE8,QXE9,QXEB,QXH9,QXQ4,QXQ7,QXS4,QXU,SCK4,SHQ4 SM32,SM34,SMC1,SMD3,SME0,SME6,SMX2,SMX4,SNC,STC4,SWA4,SXB,SXB7 SXB9,SXE4,SXE7,SXE8,SXE9,SXEB,SXQ4,SXU,VA2,VAC2,VAG2,VCN2,VD2 VDB2,VDE2,VEP7,VK2,VKB2,VM2,VMA2,VME2,VN17,VN27,VNG1,VNG2,VNS9 VSD,VSD7,VSD9,VWA2,VWC7,VWC9,VWT4,VX8,VXB,VXB7,VXB9,VXE2,VXE4 VXE6,VXE7,VXE8,VXE9,VXEB,VXP7,VXQ4
	16044-Z5T-901	.....	-	-	1	1	--------	--------	PXE8,PXM8,PXU,PXU4,QXE8,QXU,SM32,SM34,SMX2,SXE4
9	16100-ZF6-V01	CARBURETOR ASSY.(BE85B B) ···	1	1	-	-	--------	--------	HA2,HJA2,LKE,LX2,LXE2,LXE4,LXE8,LXQ4,LXU,PA2,PAE2,PXE8,PXM8 PXU,PXU4,QA2,QA26,QAA2,QAE2,QAE6,QAW,QE,QHB4,QK4,QKA4,QKB2 QME0,QNB2,QND,QNE2,QNE6,QNE8,QNK,QNR2,QNR6,QTR2,QWA2,QXB,QXB7 QXB9,QXE4,QXE6,QXE7,QXE8,QXE9,QXEB,QXH9,QXQ4,QXQ7,QXU,SCK4 SHQ4,SM32,SM34,SMC1,SME0,SME6,SMX2,SMX4,STC4,SWA4,SXB,SXB7 SXB9,SXE4,SXE7,SXE8,SXE9,SXEB,SXQ4,SXU
	16100-ZF6-W41	CARBURETOR ASSY.(BE85R A/B) ·	1	1	-	-	--------	--------	SMD3,VWT4
	16100-ZF6-V51	CARBURETOR ASSY.(BE85J A/B) ·	1	1	-	-	--------	--------	VA2,VAC2,VAG2,VCN2,VD2,VDB2,VDE2,VEP7,VK2,VKB2,VM2,VMA2,VME2 VN17,VN27,VNG1,VNG2,VNS9,VSD,VSD7,VSD9,VWA2,VWC7,VWC9,VX8,VXB VXB7,VXB9,VXE2,VXE4,VXE6,VXE7,VXE8,VXE9,VXEB,VXP7,VXQ4
	16100-ZF6-V21	CARBURETOR ASSY.(BE85C B) ···	1	-	-	-	--------	--------	QC2,QDW9,QSC2,QWA4,QWC4,QWH2,QWT2,QXC6,QXC9,QXS4
	16100-ZF6-W51	CARBURETOR ASSY.(BE85A B) ···	1	-	-	-	--------	--------	QNE9
	16100-ZF6-W12	CARBURETOR ASSY.(BE49A C) ···	1	-	-	-	--------	--------	QXC4,SNC
	16100-Z1C-901	CARBURETOR ASSY.(BE88B A) ···	-	-	1	1	--------	--------	PXE8,PXM8,PXU,PXU4,QXE8,QXU,SM32,SM34,SMX2,SXE4

Ref. No.	Part No.	Description	Reqd. QTY GX 390 U1	GX 390 R1	GX 390 U2	GX 390 R2	Serial No.		Parts catalogue code
10	16124-ZE0-005	SCREW, THROTTLE STOP ·····	1	1	1	1	--------	--------	HA2,HJA2,LKE,LX2,LXE2,LXE4,LXE8,LXQ4,LXU,PA2,PAE2,PXE8,PXM8 PXU,PXU4,QA2,QA26,QAA2,QAE2,QAE6,QAW,QC2,QDW9,QE,QHB4,QK4,QKA4 QKB2,QME0,QNB2,QND,QNE2,QNE6,QNE8,QNE9,QNK,QNR2,QNR6,QSC2,QTR2 QWA2,QWA4,QWC4,QWH2,QWT2,QXB,QXB7,QXB9,QXC4,QXC6,QXC9,QXE4 QXE6,QXE7,QXE8,QXE9,QXEB,QXH9,QXQ4,QXQ7,QXS4,QXU,SCK4,SHQ4 SM32,SM34,SMC1,SMD3,SME0,SME6,SMX2,SMX4,SNC,STC4,SWA4,SXB,SXB7 SXB9,SXE4,SXE7,SXE8,SXE9,SXEB,SXQ4,SXU,VA2,VAC2,VAG2,VCN2,VD2 VDB2,VDE2,VEP7,VK2,VKB2,VM2,VMA2,VME2,VN17,VN27,VNG1,VNG2,VNS9 VSD,VSD7,VSD9,VWA2,VWC7,VWC9,VWT4,VX8,VXB,VXB7,VXB9,VXE2,VXE4 VXE6,VXE7,VXE8,VXE9,VXEB,VXP7,VXQ4
11	16166-ZF6-V00	NOZZLE, MAIN ·····	1	1	-	-	--------	--------	HA2,HJA2,LKE,LX2,LXE2,LXE4,LXE8,LXQ4,LXU,PA2,PAE2,PXE8,PXM8 PXU,PXU4,QA2,QA26,QAA2,QAE2,QAE6,QAW,QE,QHB4,QK4,QKA4,QKB2 QME0,QNB2,QND,QNE2,QNE6,QNE8,QNK,QNR2,QNR6,QTR2,QWA2,QXB,QXB7 QXB9,QXE4,QXE6,QXE7,QXE8,QXE9,QXEB,QXH9,QXQ4,QXQ7,QXU,SCK4 SHQ4,SM32,SM34,SMC1,SME0,SME6,SMX2,SMX4,STC4,SWA4,SXB,SXB7 SXB9,SXE4,SXE7,SXE8,SXE9,SXEB,SXQ4,SXU,VA2,VAC2,VAG2,VCN2,VD2 VDB2,VDE2,VEP7,VK2,VKB2,VM2,VMA2,VME2,VN17,VN27,VNG1,VNG2,VNS9 VSD,VSD7,VSD9,VWA2,VWC7,VWC9,VX8,VXB,VXB7,VXB9,VXE2,VXE4,VXE6 VXE7,VXE8,VXE9,VXEB,VXP7,VXQ4
	16166-ZF6-W20	·····	1	1	-	-	--------	--------	SMD3,VWT4
	16166-ZF6-W10	·····	1	-	-	-	--------	--------	QC2,QDW9,QSC2,QWA4,QWC4,QWH2,QWT2,QXC4,QXC6,QXC9,QXS4,SNC
	16166-ZF6-W50	·····	1	-	-	-	--------	--------	QNE9
	16166-Z5T-901	·····	-	-	1	1	--------	--------	PXE8,PXM8,PXU,PXU4,QXE8,QXU,SM32,SM34,SMX2,SXE4
12	16172-ZE3-W10	COLLAR, SETTING ·····	1	1	1	1	--------	--------	HA2,HJA2,LKE,LX2,LXE2,LXE4,LXE8,LXQ4,LXU,PA2,PAE2,PXE8,PXM8 PXU,PXU4,QA2,QA26,QAA2,QAE2,QAE6,QAW,QC2,QDW9,QE,QHB4,QK4,QKA4 QKB2,QME0,QNB2,QND,QNE2,QNE6,QNE8,QNE9,QNK,QNR2,QNR6,QSC2,QTR2 QWA2,QWA4,QWC4,QWH2,QWT2,QXB,QXB7,QXB9,QXC6,QXC9,QXE4,QXE6 QXE7,QXE8,QXE9,QXEB,QXH9,QXQ4,QXQ7,QXS4,QXU,SCK4,SHQ4,SM32 SM34,SMC1,SME0,SME6,SMX2,SMX4,STC4,SWA4,SXB,SXB7,SXB9,SXE4 SXE7,SXE8,SXE9,SXEB,SXQ4,SXU,VA2,VAC2,VAG2,VCN2,VD2,VDB2,VDE2 VEP7,VK2,VKB2,VM2,VMA2,VME2,VN17,VN27,VNG1,VNG2,VNS9,VSD,VSD7 VSD9,VWA2,VWC7,VWC9,VX8,VXB,VXB7,VXB9,VXE2,VXE4,VXE6,VXE7,VXE8 VXE9,VXEB,VXP7,VXQ4
13	16173-001-004	PACKING, FUEL STRAINER CUP ··	1	1	1	1	--------	--------	HA2,HJA2,LKE,LX2,LXE2,LXE4,LXE8,LXQ4,LXU,PA2,PAE2,PXE8,PXM8 PXU,PXU4,QA2,QA26,QAA2,QAE2,QAE6,QAW,QC2,QDW9,QE,QHB4,QK4,QKA4 QKB2,QME0,QNB2,QND,QNE2,QNE6,QNE8,QNE9,QNK,QNR2,QNR6,QSC2,QTR2 QWA2,QWA4,QWC4,QWH2,QWT2,QXB,QXB7,QXB9,QXC4,QXC6,QXC9,QXE4 QXE6,QXE7,QXE8,QXE9,QXEB,QXH9,QXQ4,QXQ7,QXS4,QXU,SCK4,SHQ4 SM32,SM34,SMC1,SMD3,SME0,SME6,SMX2,SMX4,SNC,STC4,SWA4,SXB,SXB7 SXB9,SXE4,SXE7,SXE8,SXE9,SXEB,SXQ4,SXU,VA2,VAC2,VAG2,VCN2,VD2 VDB2,VDE2,VEP7,VK2,VKB2,VM2,VMA2,VME2,VN17,VN27,VNG1,VNG2,VNS9 VSD,VSD7,VSD9,VWA2,VWC7,VWC9,VWT4,VX8,VXB,VXB7,VXB9,VXE2,VXE4 VXE6,VXE7,VXE8,VXE9,VXEB,VXP7,VXQ4
14	16211-ZF6-D40	INSULATOR, CARBURETOR ·····	1	1	-	-	--------	--------	VK2
15	16211-ZF6-000	INSULATOR, CARBURETOR ·····	1	1	-	-	--------	--------	HA2,HJA2,LKE,LX2,LXE2,LXE4,LXE8,LXQ4,LXU,PA2,PAE2,PXE8,PXM8 PXU,PXU4,QA2,QA26,QAA2,QAE2,QAE6,QAW,QC2,QDW9,QE,QHB4,QK4,QKA4 QKB2,QME0,QNB2,QND,QNE2,QNE6,QNE8,QNE9,QNK,QNR2,QNR6,QSC2,QTR2 QWA2,QWA4,QWC4,QWH2,QWT2,QXB,QXB7,QXB9,QXC4,QXC6,QXC9,QXE4 QXE6,QXE7,QXE8,QXE9,QXEB,QXH9,QXQ4,QXQ7,QXS4,QXU,SCK4,SHQ4 SM32,SM34,SMC1,SMD3,SME0,SME6,SMX2,SMX4,SNC,STC4,SWA4,SXB,SXB7 SXB9,SXE4,SXE7,SXE8,SXE9,SXEB,SXQ4,SXU,VA2,VAC2,VAG2,VCN2,VD2 VDB2,VDE2,VEP7,VKB2,VM2,VMA2,VME2,VN17,VN27,VNG1,VNG2,VNS9,VSD VSD7,VSD9,VWA2,VWC7,VWC9,VWT4,VX8,VXB,VXB7,VXB9,VXE2,VXE4,VXE6 VXE7,VXE8,VXE9,VXEB,VXP7,VXQ4
	16211-Z5T-000	·····	-	-	1	1	--------	--------	PXE8,PXM8,PXU,PXU4,QXE8,QXU,SM32,SM34,SMX2,SXE4

2

CARBURETOR(1)

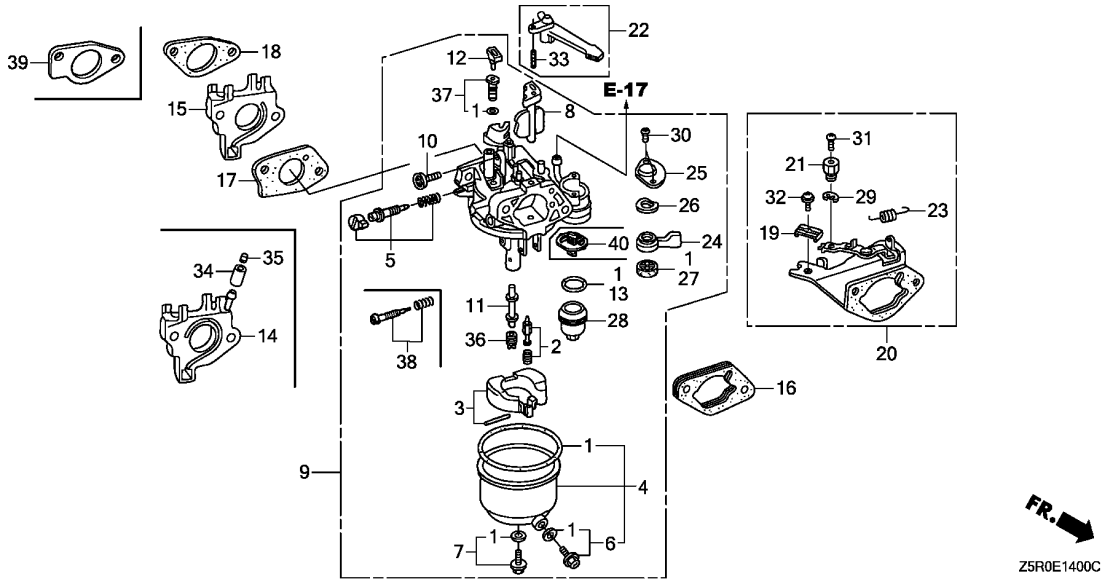

Ref. No.	Part No.	Description	Reqd. QTY GX 390 U1	GX 390 R1	GX 390 U2	GX 390 R2	Serial No.		Parts catalogue code
16	16220-ZA0-702	SPACER COMP., CARBURETOR ----	1	1	1	1	--------	--------	HA2,HJA2,LX2,LXE2,LXE4,LXE8,LXQ4,LXU,PA2,PAE2,PXE8,PXM8,PXU PXU4,QA2,QA26,QAA2,QAE2,QAE6,QAW,QC2,QDW9,QE,QHB4,QK4,QKA4 QKB2,QME0,QND,QNE2,QNE6,QNE8,QNE9,QNR2,QNR6,QSC2,QWA2,QWA4 QWC4,QWT2,QXB,QXB7,QXB9,QXC4,QXC6,QXC9,QXE4,QXE6,QXE7,QXE8 QXE9,QXEB,QXH9,QXQ4,QXQ7,QXS4,QXU,SCK4,SHQ4,SM32,SM34,SMC1 SMD3,SME0,SME6,SMX2,SMX4,SNC,STC4,SWA4,SXB,SXB7,SXB9,SXE4,SXE7 SXE8,SXE9,SXEB,SXQ4,SXU,VA2,VAC2,VAG2,VCN2,VD2,VDB2,VDE2,VEP7 VK2,VKB2,VM2,VMA2,VME2,VN17,VN27,VNG1,VNG2,VNS9,VSD,VSD7,VSD9 VWA2,VWC7,VWC9,VWT4,VX8,VXB,VXB7,VXB9,VXE2,VXE4,VXE6,VXE7,VXE8 VXE9,VXEB,VXP7,VXQ4
17	16221-ZF6-800	PACKING, CARBURETOR ---------	1	1	-	-	--------	--------	HA2,HJA2,LKE,LX2,LXE2,LXE4,LXE8,LXQ4,LXU,PA2,PAE2,PXE8,PXM8 PXU,PXU4,QA2,QA26,QAA2,QAE2,QAE6,QAW,QC2,QDW9,QE,QHB4,QK4,QKA4 QKB2,QME0,QNB2,QND,QNE2,QNE6,QNE8,QNE9,QNK,QNR2,QNR6,QSC2,QTR2 QWA2,QWA4,QWC4,QWH2,QWT2,QXB,QXB7,QXB9,QXC4,QXC6,QXC9,QXE4 QXE6,QXE7,QXE8,QXE9,QXEB,QXH9,QXQ4,QXQ7,QXS4,QXU,SCK4,SHQ4 SM32,SM34,SMC1,SMD3,SME0,SME6,SMX2,SMX4,SNC,STC4,SWA4,SXB,SXB7 SXB9,SXE4,SXE7,SXE8,SXE9,SXEB,SXQ4,SXU,VA2,VAC2,VAG2,VCN2,VD2 VDB2,VDE2,VEP7,VK2,VKB2,VM2,VMA2,VME2,VN17,VN27,VNG1,VNG2,VNS9 VSD,VSD7,VSD9,VWA2,VWC7,VWC9,VWT4,VX8,VXB,VXB7,VXB9,VXE2,VXE4 VXE6,VXE7,VXE8,VXE9,VXEB,VXP7,VXQ4
	16221-Z5T-000	----------	-	-	1	1	--------	--------	PXE8,PXM8,PXU,PXU4,QXE8,QXU,SM32,SM34,SMX2,SXE4

Ref. No.	Part No.	Description	Reqd. QTY GX 390 U1	GX 390 R1	GX 390 U2	GX 390 R2	Serial No.		Parts catalogue code
18	16223-ZE3-W00	PACKING, INSULATOR	1	1	-	-	--------	--------	HA2,HJA2,LKE,LX2,LXE2,LXE4,LXE8,LXQ4,LXU,PA2,PAE2,PXE8,PXM8 PXU,PXU4,QA2,QA26,QAA2,QAE2,QAE6,QAW,QC2,QDW9,QE,QHB4,QK4,QKA4 QKB2,QME0,QNB2,QND,QNE2,QNE6,QNE8,QNE9,QNK,QNR2,QNR6,QSC2,QTR2 QWA2,QWA4,QWC4,QWH2,QWT2,QXB,QXB7,QXB9,QXC4,QXC6,QXC9,QXE4 QXE6,QXE7,QXE8,QXE9,QXEB,QXH9,QXQ4,QXQ7,QXS4,QXU,SCK4,SHQ4 SM32,SM34,SMC1,SMD3,SME0,SME6,SMX2,SMX4,SNC,STC4,SWA4,SXB,SXB7 SXB9,SXE4,SXE7,SXE8,SXE9,SXEB,SXQ4,SXU,VA2,VAC2,VAG2,VCN2,VD2 VDB2,VDE2,VEP7,VK2,VKB2,VM2,VMA2,VME2,VN17,VN27,VNG1,VNG2,VNS9 VSD,VSD7,VSD9,VWA2,VWC7,VWC9,VWT4,VX8,VXB,VXB7,VXB9,VXE2,VXE4 VXE6,VXE7,VXE8,VXE9,VXEB,VXP7,VXQ4
19	16576-891-000	HOLDER, CABLE	1	1	-	-	--------	--------	LKE,QNB2,QNK,QTR2,QWH2
20	16590-ZE2-812	STAY ASSY., CHOKE CONTROL (REMOTE)	1	1	-	-	--------	--------	LKE,QNB2,QNK,QTR2,QWH2
21	16594-883-010	HOLDER, WIRE	1	1	-	-	--------	--------	LKE,QNB2,QNK,QTR2,QWH2
22	16610-ZE1-000	LEVER COMP., CHOKE(STD.)	1	1	1	1	--------	--------	HA2,HJA2,LX2,LXE2,LXE4,LXE8,LXQ4,LXU,PA2,PAE2,PXE8,PXM8,PXU PXU4,QA2,QA26,QAA2,QAE2,QAE6,QAW,QC2,QDW9,QE,QHB4,QK4,QKA4 QKB2,QME0,QND,QNE2,QNE6,QNE8,QNE9,QNR2,QNR6,QSC2,QWA2,QWA4 QWC4,QWT2,QXB,QXB7,QXB9,QXC4,QXC6,QXC9,QXE4,QXE6,QXE7,QXE8 QXE9,QXEB,QXH9,QXQ4,QXQ7,QXS4,QXU,SCK4,SHQ4,SM32,SM34,SMC1 SMD3,SME0,SME6,SMX2,SMX4,SNC,STC4,SWA4,SXB,SXB7,SXB9,SXE4,SXE7 SXE8,SXE9,SXEB,SXQ4,SXU,VA2,VAC2,VAG2,VCN2,VD2,VDB2,VDE2,VEP7 VK2,VKB2,VM2,VMA2,VME2,VN17,VN27,VNG1,VNG2,VNS9,VSD,VSD7,VSD9 VWA2,VWC7,VWC9,VWT4,VX8,VXB,VXB7,VXB9,VXE2,VXE4,VXE6,VXE7,VXE8 VXE9,VXEB,VXP7,VXQ4
23	16615-ZE2-810	SPRING, RETURN	1	1	-	-	--------	--------	LKE,QNB2,QNK,QTR2,QWH2
24	16953-ZE1-812	LEVER, COCK	1	1	1	1	--------	--------	HA2,HJA2,LKE,LX2,LXE2,LXE4,LXE8,LXQ4,LXU,PA2,PAE2,PXE8,PXM8 PXU,PXU4,QA2,QA26,QAA2,QAE2,QAE6,QAW,QC2,QDW9,QE,QHB4,QK4,QKA4 QKB2,QME0,QNB2,QND,QNE2,QNE6,QNE8,QNE9,QNK,QNR2,QNR6,QSC2,QTR2 QWA2,QWA4,QWC4,QWH2,QWT2,QXB,QXB7,QXB9,QXC4,QXC6,QXC9,QXE4 QXE6,QXE7,QXE8,QXE9,QXEB,QXH9,QXQ4,QXQ7,QXS4,QXU,SCK4,SHQ4 SM32,SM34,SMC1,SMD3,SME0,SME6,SMX2,SMX4,SNC,STC4,SWA4,SXB,SXB7 SXB9,SXE4,SXE7,SXE8,SXE9,SXEB,SXQ4,SXU,VA2,VAC2,VAG2,VCN2,VD2 VDB2,VDE2,VEP7,VK2,VKB2,VM2,VMA2,VME2,VN17,VN27,VNG1,VNG2,VNS9 VSD,VSD7,VSD9,VWA2,VWC7,VWC9,VWT4,VX8,VXB,VXB7,VXB9,VXE2,VXE4 VXE6,VXE7,VXE8,VXE9,VXEB,VXP7,VXQ4
25	16954-ZE1-812	PLATE, LEVER SETTING	1	1	1	1	--------	--------	HA2,HJA2,LKE,LX2,LXE2,LXE4,LXE8,LXQ4,LXU,PA2,PAE2,PXE8,PXM8 PXU,PXU4,QA2,QA26,QAA2,QAE2,QAE6,QAW,QC2,QDW9,QE,QHB4,QK4,QKA4 QKB2,QME0,QNB2,QND,QNE2,QNE6,QNE8,QNE9,QNK,QNR2,QNR6,QSC2,QTR2 QWA2,QWA4,QWC4,QWH2,QWT2,QXB,QXB7,QXB9,QXC4,QXC6,QXC9,QXE4 QXE6,QXE7,QXE8,QXE9,QXEB,QXH9,QXQ4,QXQ7,QXS4,QXU,SCK4,SHQ4 SM32,SM34,SMC1,SMD3,SME0,SME6,SMX2,SMX4,SNC,STC4,SWA4,SXB,SXB7 SXB9,SXE4,SXE7,SXE8,SXE9,SXEB,SXQ4,SXU,VA2,VAC2,VAG2,VCN2,VD2 VDB2,VDE2,VEP7,VK2,VKB2,VM2,VMA2,VME2,VN17,VN27,VNG1,VNG2,VNS9 VSD,VSD7,VSD9,VWA2,VWC7,VWC9,VWT4,VX8,VXB,VXB7,VXB9,VXE2,VXE4 VXE6,VXE7,VXE8,VXE9,VXEB,VXP7,VXQ4
26	16956-ZE1-811	SPRING, COCK LEVER	1	1	1	1	--------	--------	HA2,HJA2,LKE,LX2,LXE2,LXE4,LXE8,LXQ4,LXU,PA2,PAE2,PXE8,PXM8 PXU,PXU4,QA2,QA26,QAA2,QAE2,QAE6,QAW,QC2,QDW9,QE,QHB4,QK4,QKA4 QKB2,QME0,QNB2,QND,QNE2,QNE6,QNE8,QNE9,QNK,QNR2,QNR6,QSC2,QTR2 QWA2,QWA4,QWC4,QWH2,QWT2,QXB,QXB7,QXB9,QXC4,QXC6,QXC9,QXE4 QXE6,QXE7,QXE8,QXE9,QXEB,QXH9,QXQ4,QXQ7,QXS4,QXU,SCK4,SHQ4 SM32,SM34,SMC1,SMD3,SME0,SME6,SMX2,SMX4,SNC,STC4,SWA4,SXB,SXB7 SXB9,SXE4,SXE7,SXE8,SXE9,SXEB,SXQ4,SXU,VA2,VAC2,VAG2,VCN2,VD2 VDB2,VDE2,VEP7,VK2,VKB2,VM2,VMA2,VME2,VN17,VN27,VNG1,VNG2,VNS9 VSD,VSD7,VSD9,VWA2,VWC7,VWC9,VWT4,VX8,VXB,VXB7,VXB9,VXE2,VXE4 VXE6,VXE7,VXE8,VXE9,VXEB,VXP7,VXQ4

CARBURETOR(1)

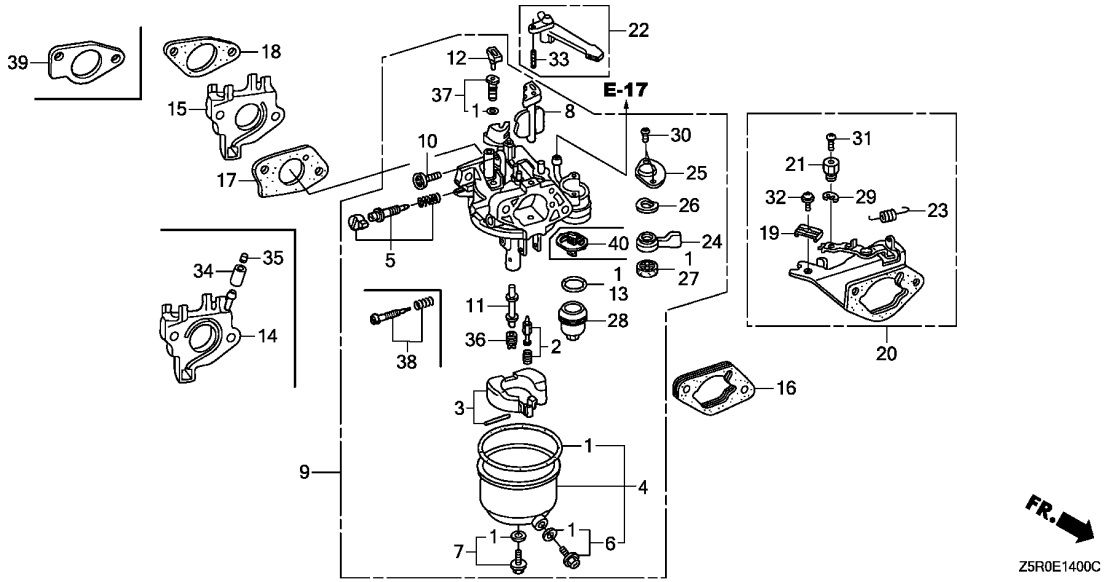

Ref. No.	Part No.	Description	Reqd. QTY GX 390 U1	GX 390 R1	GX 390 U2	GX 390 R2	Serial No.	Parts catalogue code
27	16957-ZE1-812	PACKING, FUEL COCK	1	1	1	1	-------- --------	HA2,HJA2,LKE,LX2,LXE2,LXE4,LXE8,LXQ4,LXU,PA2,PAE2,PXE8,PXM8 PXU,PXU4,QA2,QA26,QAA2,QAE2,QAE6,QAW,QC2,QDW9,QE,QHB4,QK4,QKA4 QKB2,QME0,QNB2,QND,QNE2,QNE6,QNE8,QNE9,QNK,QNR2,QNR6,QSC2,QTR2 QWA2,QWA4,QWC4,QWH2,QWT2,QXB,QXB7,QXB9,QXC4,QXC6,QXC9,QXE4 QXE6,QXE7,QXE8,QXE9,QXEB,QXH9,QXQ4,QXQ7,QXS4,QXU,SCK4,SHQ4 SM32,SM34,SMC1,SMD3,SME0,SME6,SMX2,SMX4,SNC,STC4,SWA4,SXB,SXB7 SXB9,SXE4,SXE7,SXE8,SXE9,SXEB,SXQ4,SXU,VA2,VAC2,VAG2,VCN2,VD2 VDB2,VDE2,VEP7,VK2,VKB2,VM2,VMA2,VME2,VN17,VN27,VNG1,VNG2,VNS9 VSD,VSD7,VSD9,VWA2,VWC7,VWC9,VWT4,VX8,VXB,VXB7,VXB9,VXE2,VXE4 VXE6,VXE7,VXE8,VXE9,VXEB,VXP7,VXQ4
28	16967-ZE0-811	CUP, FUEL STRAINER	1	1	1	1	-------- --------	HA2,HJA2,LKE,LX2,LXE2,LXE4,LXE8,LXQ4,LXU,PA2,PAE2,PXE8,PXM8 PXU,PXU4,QA2,QA26,QAA2,QAE2,QAE6,QAW,QC2,QDW9,QE,QHB4,QK4,QKA4 QKB2,QME0,QNB2,QND,QNE2,QNE6,QNE8,QNE9,QNK,QNR2,QNR6,QSC2,QTR2 QWA2,QWA4,QWC4,QWH2,QWT2,QXB,QXB7,QXB9,QXC4,QXC6,QXC9,QXE4 QXE6,QXE7,QXE8,QXE9,QXEB,QXH9,QXQ4,QXQ7,QXS4,QXU,SCK4,SHQ4 SM32,SM34,SMC1,SMD3,SME0,SME6,SMX2,SMX4,SNC,STC4,SWA4,SXB,SXB7 SXB9,SXE4,SXE7,SXE8,SXE9,SXEB,SXQ4,SXU,VA2,VAC2,VAG2,VCN2,VD2 VDB2,VDE2,VEP7,VK2,VKB2,VM2,VMA2,VME2,VN17,VN27,VNG1,VNG2,VNS9 VSD,VSD7,VSD9,VWA2,VWC7,VWC9,VWT4,VX8,VXB,VXB7,VXB9,VXE2,VXE4 VXE6,VXE7,VXE8,VXE9,VXEB,VXP7,VXQ4
29	90605-230-000	CIRCLIP, 5MM	1	1	-	-	-------- --------	LKE,QNB2,QNK,QTR2,QWH2

Ref. No.	Part No.	Description	Reqd. QTY GX 390 U1	GX 390 R1	GX 390 U2	GX 390 R2	Serial No.	Parts catalogue code
30	93500-03006-1H	SCREW, PAN, 3X6	2	2	2	2	-------- --------	HA2,HJA2,LKE,LX2,LXE2,LXE4,LXE8,LXQ4,LXU,PA2,PAE2,PXE8,PXM8 PXU,PXU4,QA2,QA26,QAA2,QAE2,QAE6,QAW,QC2,QDW9,QE,QHB4,QK4,QKA4 QKB2,QMEO,QNB2,QND,QNE2,QNE6,QNE8,QNE9,QNK,QNR2,QNR6,QSC2,QTR2 QWA2,QWA4,QWC4,QWH2,QWT2,QXB,QXB7,QXB9,QXC4,QXC6,QXC9,QXE4 QXE6,QXE7,QXE8,QXE9,QXEB,QXH9,QXQ4,QXQ7,QXS4,QXU,SCK4,SHQ4 SM32,SM34,SMC1,SMD3,SMEO,SME6,SMX2,SMX4,SNC,STC4,SWA4,SXB,SXB7 SXB9,SXE4,SXE7,SXE8,SXE9,SXEB,SXQ4,SXU,VA2,VAC2,VAG2,VCN2,VD2 VDB2,VDE2,VEP7,VK2,VKB2,VM2,VMA2,VME2,VN17,VN27,VNG1,VNG2,VNS9 VSD,VSD7,VSD9,VWA2,VWC7,VWC9,VWT4,VX8,VXB,VXB7,VXB9,VXE2,VXE4 VXE6,VXE7,VXE8,VXE9,VXEB,VXP7,VXQ4
31	93500-04006-0H	SCREW, PAN, 4X6	1	1	-	-	-------- --------	LKE,QNB2,QNK,QTR2,QWH2
32	93893-05016-00	SCREW-WASHER, 5X16	1	1	-	-	-------- --------	LKE,QNB2,QNK,QTR2,QWH2
33	94305-20122	PIN, SPRING, 2X12	1	1	1	1	-------- --------	HA2,HJA2,LX2,LXE2,LXE4,LXE8,LXQ4,LXU,PA2,PAE2,PXE8,PXM8,PXU PXU4,QA2,QA26,QAA2,QAE2,QAE6,QAW,QC2,QDW9,QE,QHB4,QK4,QKA4 QKB2,QMEO,QND,QNE2,QNE6,QNE8,QNE9,QNR2,QNR6,QSC2,QWA2,QWA4 QWC4,QWT2,QXB,QXB7,QXB9,QXC4,QXC6,QXC9,QXE4,QXE6,QXE7,QXE8 QXE9,QXEB,QXH9,QXQ4,QXQ7,QXS4,QXU,SCK4,SHQ4,SM32,SM34,SMC1 SMD3,SMEO,SME6,SMX2,SMX4,SNC,STC4,SWA4,SXB,SXB7,SXB9,SXE4,SXE7 SXE8,SXE9,SXEB,SXQ4,SXU,VA2,VAC2,VAG2,VCN2,VD2,VDB2,VDE2,VEP7 VK2,VKB2,VM2,VMA2,VME2,VN17,VN27,VNG1,VNG2,VNS9,VSD,VSD7,VSD9 VWA2,VWC7,VWC9,VWT4,VX8,VXB,VXB7,VXB9,VXE2,VXE4,VXE6,VXE7,VXE8 VXE9,VXEB,VXP7,VXQ4
34	95001-35025-40	TUBE, FUEL, 3.5X25 (95001-35001-60M)	1	1	-	-	-------- --------	VK2
35	96205-04005	PLUG, CONE TYPE, 4X5	1	1	-	-	-------- --------	VK2
36	99101-ZH8-0880	JET, MAIN, #88	(1)	(1)	-	-	-------- --------	HA2,HJA2,LKE,LX2,LXE2,LXE4,LXE8,LXQ4,LXU,PA2,PAE2,PXE8,PXM8 PXU,PXU4,QA2,QA26,QAA2,QAE2,QAE6,QAW,QE,QHB4,QK4,QKA4,QKB2 QMEO,QNB2,QND,QNE2,QNE6,QNE8,QNK,QNR2,QNR6,QTR2,QWA2,QXB,QXB7 QXB9,QXE4,QXE6,QXE7,QXE8,QXE9,QXEB,QXH9,QXQ4,QXQ7,QXU,SCK4 SHQ4,SM32,SM34,SMC1,SMEO,SME6,SMX2,SMX4,STC4,SWA4,SXB,SXB7 SXB9,SXE4,SXE7,SXE8,SXE9,SXEB,SXQ4,SXU
	99101-ZH8-0920	JET, MAIN, #92	1	1	-	-	-------- --------	HA2,HJA2,LKE,LX2,LXE2,LXE4,LXE8,LXQ4,LXU,PA2,PAE2,PXE8,PXM8 PXU,PXU4,QA2,QA26,QAA2,QAE2,QAE6,QAW,QE,QHB4,QK4,QKA4,QKB2 QMEO,QNB2,QND,QNE2,QNE6,QNE8,QNK,QNR2,QNR6,QTR2,QWA2,QXB,QXB7 QXB9,QXE4,QXE6,QXE7,QXE8,QXE9,QXEB,QXH9,QXQ4,QXQ7,QXU,SCK4 SHQ4,SM32,SM34,SMC1,SMEO,SME6,SMX2,SMX4,STC4,SWA4,SXB,SXB7 SXB9,SXE4,SXE7,SXE8,SXE9,SXEB,SXQ4,SXU
	99101-ZH8-0900	JET, MAIN, #90	(1)	(1)	-	-	-------- --------	HA2,HJA2,LKE,LX2,LXE2,LXE4,LXE8,LXQ4,LXU,PA2,PAE2,PXE8,PXM8 PXU,PXU4,QA2,QA26,QAA2,QAE2,QAE6,QAW,QE,QHB4,QK4,QKA4,QKB2 QMEO,QNB2,QND,QNE2,QNE6,QNE8,QNK,QNR2,QNR6,QTR2,QWA2,QXB,QXB7 QXB9,QXE4,QXE6,QXE7,QXE8,QXE9,QXEB,QXH9,QXQ4,QXQ7,QXU,SCK4 SHQ4,SM32,SM34,SMC1,SMEO,SME6,SMX2,SMX4,STC4,SWA4,SXB,SXB7 SXB9,SXE4,SXE7,SXE8,SXE9,SXEB,SXQ4,SXU,VA2,VAC2,VAG2,VCN2,VD2 VDB2,VDE2,VEP7,VK2,VKB2,VM2,VMA2,VME2,VN17,VN27,VNG1,VNG2,VNS9 VSD,VSD7,VSD9,VWA2,VWC7,VWC9,VX8,VXB,VXB7,VXB9,VXE2,VXE4,VXE6 VXE7,VXE8,VXE9,VXEB,VXP7,VXQ4
	99101-ZH8-0950	JET, MAIN, #95	(1)	(1)	-	-	-------- --------	QC2,QDW9,QNE9,QSC2,QWA4,QWC4,QWH2,QWT2,QXC6,QXC9,QXS4,SMD3 VWT4
	99101-ZH8-0980	JET, MAIN, #98	(1)	(1)	-	-	-------- --------	QC2,QDW9,QNE9,QSC2,QWA4,QWC4,QWH2,QWT2,QXC6,QXC9,QXS4,SMD3 VWT4
	99101-ZH8-1000	JET, MAIN, #100	1	1	-	-	-------- --------	QC2,QDW9,QNE9,QSC2,QWA4,QWC4,QWH2,QWT2,QXC6,QXC9,QXS4,SMD3 VWT4
	99101-ZH8-0920	JET, MAIN, #92	(1)	(1)	-	-	-------- --------	VA2,VAC2,VAG2,VCN2,VD2,VDB2,VDE2,VEP7,VK2,VKB2,VM2,VMA2,VME2 VN17,VN27,VNG1,VNG2,VNS9,VSD,VSD7,VSD9,VWA2,VWC7,VWC9,VX8,VXB VXB7,VXB9,VXE2,VXE4,VXE6,VXE7,VXE8,VXE9,VXEB,VXP7,VXQ4

CARBURETOR(1)

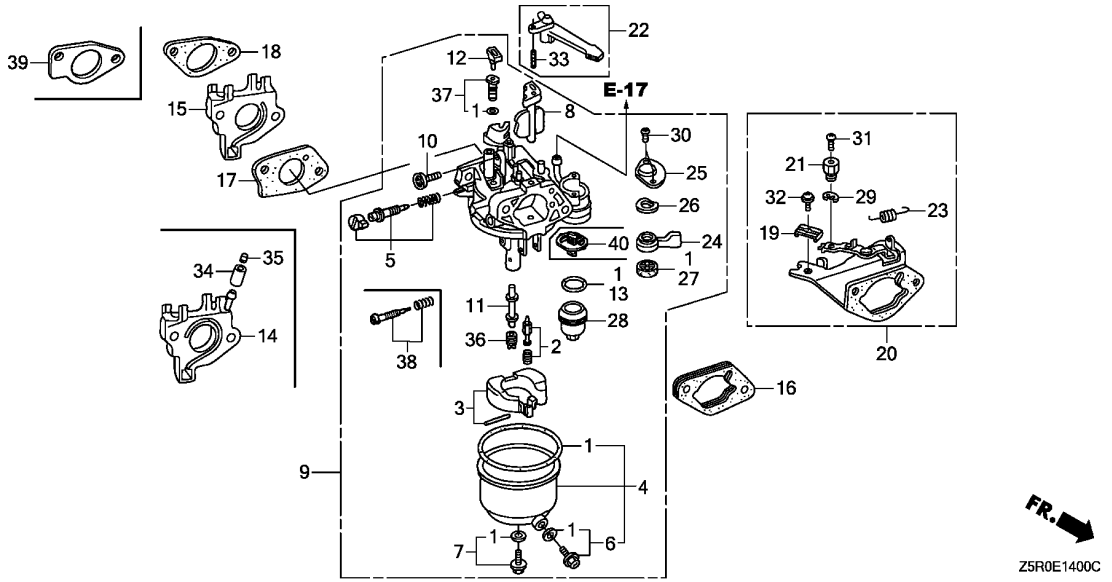

Ref. No.	Part No.	Description	Reqd. QTY GX 390 U1	GX 390 R1	GX 390 U2	GX 390 R2	Serial No.		Parts catalogue code
36)	99101-ZH8-0950	JET, MAIN, #95	1	1	-	-	--------	--------	VA2,VAC2,VAG2,VCN2,VD2,VDB2,VDE2,VEP7,VK2,VKB2,VM2,VMA2,VME2 VN17,VN27,VNG1,VNG2,VNS9,VSD,VSD7,VSD9,VWA2,VWC7,VWC9,VX8,VXB VXB7,VXB9,VXE2,VXE4,VXE6,VXE7,VXE8,VXE9,VXEB,VXP7,VXQ4
	99101-ZH8-1100	JET, MAIN, #110	(1)	-	-	-	--------	--------	QXC4,SNC
	99101-ZH8-1120	JET, MAIN, #112	(1)	-	-	-	--------	--------	QXC4,SNC
	99101-ZH8-1150	JET, MAIN, #115	1	-	-	-	--------	--------	QXC4,SNC
	99101-ZH8-1020	JET, MAIN, #102	-	-	(1)	(1)	--------	--------	PXE8,PXM8,PXU,PXU4,QXE8,QXU,SM32,SM34,SMX2,SXE4
	99101-ZH8-1050	JET, MAIN, #105	-	-	1	1	--------	--------	PXE8,PXM8,PXU,PXU4,QXE8,QXU,SM32,SM34,SMX2,SXE4
	99101-ZH8-0980	JET, MAIN, #98	-	-	(1)	-			
			-	-	-	(1)	--------	--------	PXM8
37	99204-ZA0-0450	JET SET, PILOT, #45	1	1	-	-	--------	--------	HA2,HJA2,LKE,LX2,LXE2,LXE4,LXE8,LXQ4,LXU,PA2,PAE2,PXE8,PXM8 PXU,PXU4,QA2,QA26,QAA2,QAE2,QAE6,QAW,QC2,QDW9,QE,QHB4,QK4,QKA4 QKB2,QME0,QNB2,QND,QNE2,QNE6,QNE8,QNK,QNR2,QNR6,QSC2,QTR2,QWA2 QWA4,QWC4,QWH2,QWT2,QXB,QXB7,QXB9,QXC6,QXC9,QXE4,QXE6,QXE7 QXE8,QXE9,QXEB,QXH9,QXQ4,QXQ7,QXS4,QXU,SCK4,SHQ4,SM32,SM34 SMC1,SME0,SME6,SMX2,SMX4,STC4,SWA4,SXB,SXB7,SXB9,SXE4,SXE7 SXE8,SXE9,SXEB,SXQ4,SXU,VA2,VAC2,VAG2,VCN2,VD2,VDB2,VDE2,VEP7 VK2,VKB2,VM2,VMA2,VME2,VN17,VN27,VNG1,VNG2,VNS9,VSD,VSD7,VSD9 VWA2,VWC7,VWC9,VX8,VXB,VXB7,VXB9,VXE2,VXE4,VXE6,VXE7,VXE8,VXE9 VXEB,VXP7,VXQ4
	99204-ZA0-0400	JET SET, PILOT, #40	1	1	-	-	--------	--------	SMD3,VWT4
	99204-ZE0-0450	JET SET, PILOT, #45	1	-	-	-	--------	--------	QNE9
	99204-ZE2-0400	JET SET, PILOT, #40	1	-	-	-	--------	--------	QXC4,SNC
	99204-ZE0-0380	JET SET, PILOT, #38	-	-	1	1	--------	--------	PXE8,PXM8,PXU,PXU4,QXE8,QXU,SM32,SM34,SMX2,SXE4
38	16016-ZF6-005	SCREW SET, PILOT	-	-	1	1	--------	--------	PXE8,PXM8,PXU,PXU4,QXE8,QXU,SM32,SM34,SMX2,SXE4
39	16212-Z5T-000	PACKING, CARBURETOR INSULATOR	-	-	1	1	--------	--------	PXE8,PXM8,PXU,PXU4,QXE8,QXU,SM32,SM34,SMX2,SXE4
40	16959-Z5T-901	FILTER, CUP	-	-	1	1	--------	--------	PXE8,PXM8,PXU,PXU4,QXE8,QXU,SM32,SM34,SMX2,SXE4

CARBURETOR(2)

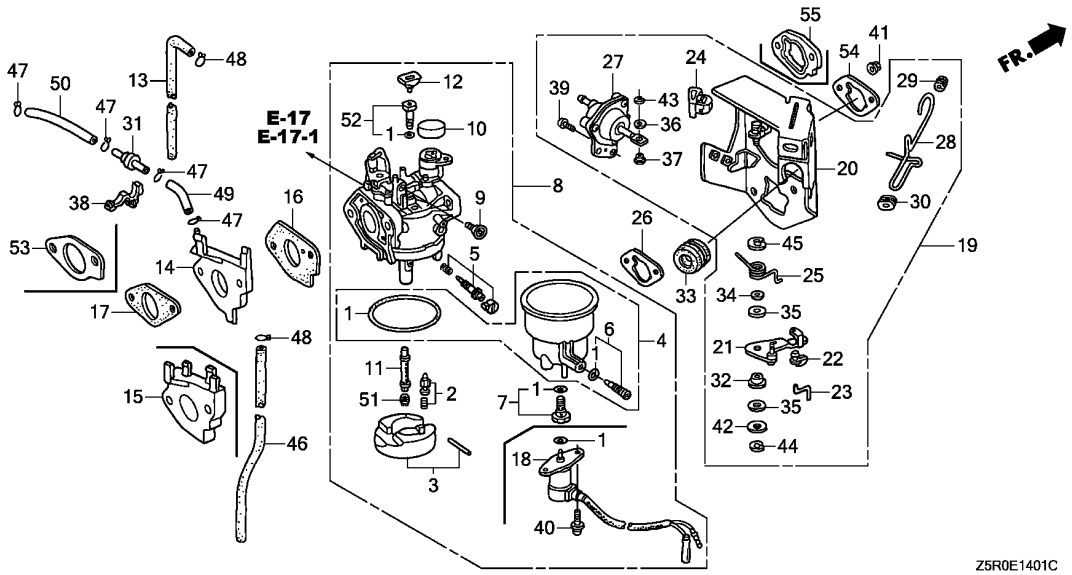

Ref. No.	L.O.N.	(Relative ref. Number) Description	F.R.T.

Ref. No.	Part No.	Description	Reqd. QTY GX 390 U1	GX 390 R1	GX 390 U2	GX 390 R2	Serial No.		Parts catalogue code
1	16010-ZE3-701	GASKET SET	1	1	-	-	--------	--------	ED6,EDD2,EDS2,EDS6,EDT6,EN6,ENT2,VEP9,VKE4,VKE9,VKX4,VKX9,VMS2 VS49,VSD4,VWC,VWE,VWS
	16010-ZA0-921		1	1	-	-	--------	--------	VAA1,VAA8,VC2,VC2N,VE39,VPE4,VPE5,VPE7,VPE9,VPX4,VPX5,VPX7 VPX9,VS39,VTH4,VX39,VXG,VXG2
	16010-ZE3-701		-	-	-	1	--------	--------	ED6,EDD2,EN6,ENT2,VWS
2	16011-ZA0-931	VALVE SET, FLOAT	1	1	-	-	--------	--------	ED6,EDD2,EDS2,EDS6,EDT6,EN6,ENT2,VAA1,VAA8,VC2,VC2N,VE39,VEP9 VKE4,VKE9,VKX4,VKX9,VMS2,VPE4,VPE5,VPE7,VPE9,VPX4,VPX5,VPX7 VPX9,VS39,VS49,VSD4,VTH4,VWC,VWE,VWS,VX39,VXG,VXG2
			-	-	-	1	--------	--------	ED6,EDD2,EN6,ENT2,VWS
3	16013-ZA0-931	FLOAT SET	1	1	-	-	--------	--------	ED6,EDD2,EDS2,EDS6,EDT6,EN6,ENT2,VAA1,VAA8,VC2,VC2N,VE39,VEP9 VKE4,VKE9,VKX4,VKX9,VMS2,VPE4,VPE5,VPE7,VPE9,VPX4,VPX5,VPX7 VPX9,VS39,VS49,VSD4,VTH4,VWC,VWE,VWS,VX39,VXG,VXG2
			-	-	-	1	--------	--------	ED6,EDD2,EN6,ENT2,VWS
4	16015-ZA0-931	CHAMBER SET, FLOAT	1	1	-	-	--------	--------	ED6,EDD2,EDS2,EDS6,EDT6,EN6,ENT2,VAA1,VAA8,VC2,VC2N,VE39,VEP9 VKE4,VKE9,VKX4,VKX9,VMS2,VPE4,VPE5,VPE7,VPE9,VPX4,VPX5,VPX7 VPX9,VS39,VS49,VSD4,VTH4,VWC,VWE,VWS,VX39,VXG,VXG2
			-	-	-	1	--------	--------	ED6,EDD2,EN6,ENT2,VWS
5	16016-ZH8-W01	SCREW SET	1	1	-	-	--------	--------	ED6,EDD2,EDS2,EDS6,EDT6,EN6,ENT2,VAA1,VAA8,VC2,VC2N,VE39,VEP9 VKE4,VKE9,VKX4,VKX9,VMS2,VPE4,VPE5,VPE7,VPE9,VPX4,VPX5,VPX7 VPX9,VS39,VS49,VSD4,VTH4,VWC,VWE,VWS,VX39,VXG,VXG2
			-	-	-	1	--------	--------	ED6,EDD2,EN6,ENT2,VWS
6	16024-124-761	SCREW SET, DRAIN	1	1	-	-	--------	--------	EDS2,EDS6,EDT6
	16024-124-760		1	-	-	-	--------	--------	VAA1,VAA8,VC2N,VEP9,VKE4,VKE9,VKX4,VKX9,VS49,VSD4,VTH4,VWS
	16024-124-761								
		(CARBURETOR NO.)	1	-	-	-	--------	BE87A B	ED6,EDD2,EN6,ENT2,VMS2,VWC,VWE
		,,	1	-	-	-	--------	BE87F B	VC2,VE39,VPE4,VPE5,VPE7,VPE9,VPX4,VPX5,VPX7,VPX9,VS39,VX39,VXG VXG2

CARBURETOR(2)

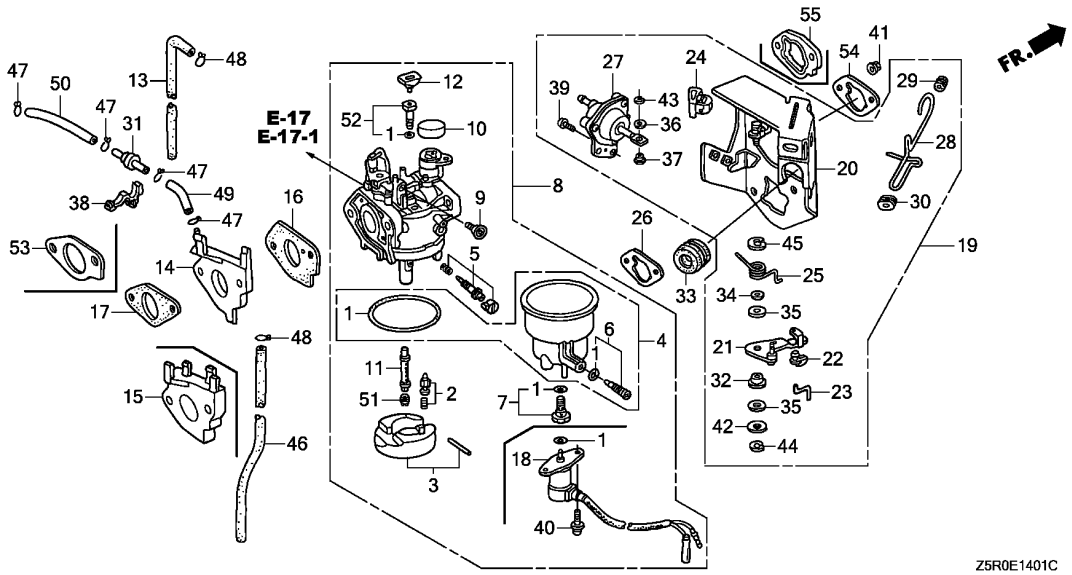

Ref. No.	Part No.	Description	Reqd. QTY GX 390 U1	GX 390 R1	GX 390 U2	GX 390 R2	Serial No.		Parts catalogue code
(6)	16024-124-760	SCREW SET, DRAIN ·····							
		(CARBURETOR NO.)	1	-	-	-	BE87A C	--------	ED6,EDD2,EN6,ENT2,VMS2,VWC,VWE
		,,	1	-	-	-	BE89F B	--------	VC2,VE39,VPE4,VPE5,VPE7,VPE9,VPX4,VPX5,VPX7,VPX9,VS39,VX39,VXG VXG2
			-	1	-	1	--------	--------	ED6,EDD2,EN6,ENT2,VAA1,VAA8,VC2,VEP9,VKE4,VKX4,VPE4,VPE5,VPE7 VPE9,VPX4,VPX5,VPX7,VPX9,VS39,VS49,VSD4,VTH4,VWC,VWE,VWS,VXG
7	16028-ZA0-931	SCREW SET ·····	1	1	-	-	--------	--------	ED6,EDD2,EDS2,EDS6,EDT6,EN6,ENT2,VEP9,VKE4,VKE9,VKX4,VKX9,VMS2 VS49,VSD4,VWC,VWE,VWS
	16028-ZA0-701	·····	1	1	-	-	--------	--------	VAA1,VAA8,VC2,VC2N,VE39,VPE4,VPE5,VPE7,VPE9,VPX4,VPX5,VPX7 VPX9,VS39,VTH4,VX39,VXG,VXG2
	16028-ZA0-931	·····	-	-	-	1	--------	--------	ED6,EDD2,EN6,ENT2,VWS
8	16100-Z5R-U71	CARBURETOR ASSY.(BE89F B) ···	1	-	-	-	--------	--------	VC2N
	16100-ZF6-V41	CARBURETOR ASSY.(BE87G A) ···	1	-	-	-	--------	1101673	EDS2,EDS6,EDT6
	16100-ZK6-P92	CARBURETOR ASSY.(BE87M B) ···	1	-	-	-	--------	1101704	VTH4
	16100-ZK6-U72	CARBURETOR ASSY.(BE87F B) ···	1	-	-	-	--------	1102787	VE39,VPE4,VPE5,VPE7,VPE9,VPX4,VPX5,VPX7,VPX9,VS39,VX39
	16100-ZK6-U33	CARBURETOR ASSY.(BE87E C) ···	1	-	-	-	--------	1102787	VKE4,VKE9,VKX4,VKX9
	16100-ZF6-742	CARBURETOR ASSY.(BE87A B/C) ·	1	-	-	-	--------	1105013	EN6,VMS2,VWC,VWE
	16100-ZK6-U72	CARBURETOR ASSY.(BE87F B) ···	1	-	-	-	--------	1105013	VC2,VXG,VXG2
	16100-ZK6-U33	CARBURETOR ASSY.(BE87E C) ···	1	-	-	-	--------	1111074	VS49,VSD4
	16100-ZF6-742	CARBURETOR ASSY.(BE87A B/C) ·	1	-	-	-	--------	1112240	ENT2
			1	-	-	-	--------	1114018	ED6
			1	-	-	-	--------	1114019	EDD2
	16100-ZK6-P92	CARBURETOR ASSY.(BE87M B) ···	1	-	-	-	--------	1183269	VAA1,VAA8
	16100-Z5R-741	CARBURETOR ASSY.(BE89C A/B) ·	1	-	-	-	--------	1429004	VEP9,VWS
	16100-Z5R-V41	CARBURETOR ASSY.(BE89B A) ···	1	-	-	-	1101674	--------	EDS2,EDS6,EDT6
	16100-Z5S-P91	CARBURETOR ASSY.(BE89D A) ···	1	-	-	-	1101705	--------	VTH4
	16100-Z5R-U71	CARBURETOR ASSY.(BE89F B) ···	1	-	-	-	1102788	--------	VE39,VPE4,VPE5,VPE7,VPE9,VPX4,VPX5,VPX7,VPX9,VS39,VX39
	16100-Z5S-U31	CARBURETOR ASSY.(BE89E A/B) ·	1	-	-	-	1102788	--------	VKE9,VKX9
			1	-	-	-	1102788	1420062	VKE4,VKX4

Ref. No.	Part No.	Description	Reqd. QTY GX 390 U1	GX 390 R1	GX 390 U2	GX 390 R2	Serial No.		Parts catalogue code
(8)	16100-Z5R-U71	CARBURETOR ASSY.(BE89F B) ···	1	-	-	-	1105014	--------	VC2,VXG,VXG2
	16100-Z5R-741	CARBURETOR ASSY.(BE89C A/B) ·	1	-	-	-	1105014	--------	VMS2
			1	-	-	-	1105014	1429004	EN6,VWC,VWE
	16100-Z5S-U31	CARBURETOR ASSY.(BE89E A/B) ·	1	-	-	-	1111075	1420062	VS49,VSD4
	16100-Z5R-741	CARBURETOR ASSY.(BE89C A/B) ·	1	-	-	-	1112241	1429004	ENT2
			1	-	-	-	1114019	1429004	ED6
			1	-	-	-	1114020	1429004	EDD2
	16100-Z5S-P91	CARBURETOR ASSY.(BE89D A) ···	1	-	-	-	1183270	--------	VAA1,VAA8
	16100-Z5S-U32	CARBURETOR ASSY.(BE89E B) ···	1	-	-	-	1420063	--------	VKE4,VKX4,VS49,VSD4
	16100-Z5R-742	CARBURETOR ASSY.(BE89C B) ···	1	-	-	-	1429005	--------	ED6,EDD2,EN6,ENT2,VEP9,VWC,VWE,VWS
			-	1	-	1	--------	--------	ED6,EDD2,EN6,ENT2,VEP9,VWC,VWE,VWS
	16100-Z5R-V41	CARBURETOR ASSY.(BE89B A) ···	-	1	-	-	--------	--------	EDS2,EDS6,EDT6
	16100-Z5S-P91	CARBURETOR ASSY.(BE89D A) ···	-	1	-	-	--------	--------	VAA1,VAA8,VTH4
	16100-Z5R-U71	CARBURETOR ASSY.(BE89F B) ···	-	1	-	-	--------	--------	VC2,VPE4,VPE5,VPE7,VPE9,VPX4,VPX5,VPX7,VPX9,VS39,VXG
	16100-Z5S-U32	CARBURETOR ASSY.(BE89E B) ···	-	1	-	-	--------	--------	VKE4,VKX4,VS49,VSD4
	16100-ZBH-V41	CARBURETOR ASSY. ·····	-	-	-	1	--------	--------	EDS6,EDT6
9	16124-ZE0-005	SCREW, THROTTLE STOP ·····	1	1	-	-	--------	--------	ED6,EDD2,EDS2,EDS6,EDT6,EN6,ENT2,VAA1,VAA8,VC2,VC2N,VE39,VEP9 VKE4,VKE9,VKX4,VKX9,VMS2,VPE4,VPE5,VPE7,VPE9,VPX4,VPX5,VPX7 VPX9,VS39,VS49,VSD4,VTH4,VWC,VWE,VWS,VX39,VXG,VXG2
			-	-	-	1	--------	--------	ED6,EDD2,EN6,ENT2,VWS
10	16148-141-881	CAP, CHOKE DUST ·····	1	1	-	-	--------	--------	ED6,EDD2,EDS2,EDS6,EDT6,EN6,ENT2,VAA1,VAA8,VC2,VC2N,VE39,VEP9 VKE4,VKE9,VKX4,VKX9,VMS2,VPE4,VPE5,VPE7,VPE9,VPX4,VPX5,VPX7 VPX9,VS39,VS49,VSD4,VTH4,VWC,VWE,VWS,VX39,VXG,VXG2
			-	-	-	1	--------	--------	ED6,EDD2,EN6,ENT2,VWS
11	16166-ZF6-005	NOZZLE, MAIN ·····	1	1	-	-	--------	--------	ED6,EDD2,EDS2,EDS6,EDT6,EN6,ENT2,VAA1,VAA8,VC2,VC2N,VE39,VEP9 VKE4,VKE9,VKX4,VKX9,VMS2,VPE4,VPE5,VPE7,VPE9,VPX4,VPX5,VPX7 VPX9,VS39,VS49,VSD4,VTH4,VWC,VWE,VWS,VX39,VXG,VXG2
			-	-	-	1	--------	--------	ED6,EDD2,EN6,ENT2,VWS
12	16172-ZE3-W10	COLLAR, SETTING ·····	1	1	-	-	--------	--------	ED6,EDD2,EDS2,EDS6,EDT6,EN6,ENT2,VAA1,VAA8,VC2,VC2N,VE39,VEP9 VKE4,VKE9,VKX4,VKX9,VMS2,VPE4,VPE5,VPE7,VPE9,VPX4,VPX5,VPX7 VPX9,VS39,VS49,VSD4,VTH4,VWC,VWE,VWS,VX39,VXG,VXG2
			-	-	-	1	--------	--------	ED6,EDD2,EN6,ENT2,VWS
13	16199-ZA0-930	TUBE, AIR VENT ·····	1	1	-	-	--------	--------	VS49,VSD4,VTH4
14	16211-ZF6-D40	INSULATOR, CARBURETOR ·····	1	1	-	-	--------	--------	ED6,EDD2,EDS2,EDS6,EDT6,EN6,ENT2,VC2,VC2N,VE39,VEP9,VKE4,VKE9 VKX4,VKX9,VPE4,VPE5,VPE7,VPE9,VPX4,VPX5,VPX7,VPX9,VS39,VS49 VSD4,VTH4,VWC,VWE,VWS,VX39,VXG,VXG2
	16211-ZBH-700	·····	-	-	-	1	--------	--------	ED6,EDD2,EDS6,EDT6,EN6,ENT2,VWS
15	16211-ZF6-000	INSULATOR, CARBURETOR ·····	1	1	-	-	--------	--------	VAA1,VAA8,VMS2
16	16221-ZF6-800	PACKING, CARBURETOR ·····	1	1	-	-	--------	--------	ED6,EDD2,EDS2,EDS6,EDT6,EN6,ENT2,VAA1,VAA8,VC2,VC2N,VE39,VEP9 VKE4,VKE9,VKX4,VKX9,VMS2,VPE4,VPE5,VPE7,VPE9,VPX4,VPX5,VPX7 VPX9,VS39,VS49,VSD4,VTH4,VWC,VWE,VWS,VX39,VXG,VXG2
	16221-Z5T-000	·····	-	-	-	1	--------	--------	ED6,EDD2,EDS6,EDT6,EN6,ENT2,VWS
17	16223-ZE3-W00	PACKING, INSULATOR ·····	1	1	-	-	--------	--------	ED6,EDD2,EDS2,EDS6,EDT6,EN6,ENT2,VAA1,VAA8,VC2,VC2N,VE39,VEP9 VKE4,VKE9,VKX4,VKX9,VMS2,VPE4,VPE5,VPE7,VPE9,VPX4,VPX5,VPX7 VPX9,VS39,VS49,VSD4,VTH4,VWC,VWE,VWS,VX39,VXG,VXG2
18	16230-ZE3-701	VALVE ASSY., SOLENOID ·····	1	-	-	-	--------	--------	VKE9,VKX9,VMS2
			1	-	-	-	--------	1414810	EDS2,EDS6,EDT6
			1	-	-	-	--------	1420062	VKE4,VKX4,VS49,VSD4
			1	-	-	-	--------	1429004	ED6,EDD2,EN6,ENT2,VEP9,VWC,VWE,VWS
	16230-ZE3-702	·····	1	-	-	-	1414811	--------	EDS2,EDS6,EDT6
			1	-	-	-	1420063	--------	VKE4,VKX4,VS49,VSD4
			1	-	-	-	1429005	--------	ED6,EDD2,EN6,ENT2,VEP9,VWC,VWE,VWS
			-	1	-	-	--------	--------	ED6,EDD2,EDS2,EDS6,EDT6,EN6,ENT2,VEP9,VKE4,VKX4,VS49,VSD4,VWC VWE,VWS
			-	-	-	1	--------	--------	ED6,EDD2,EN6,ENT2,VWS
19	16260-ZE3-D22	STAY ASSY., MANUAL CHOKE ····	1	-	-	-	--------	--------	VC2N

2

CARBURETOR(2)

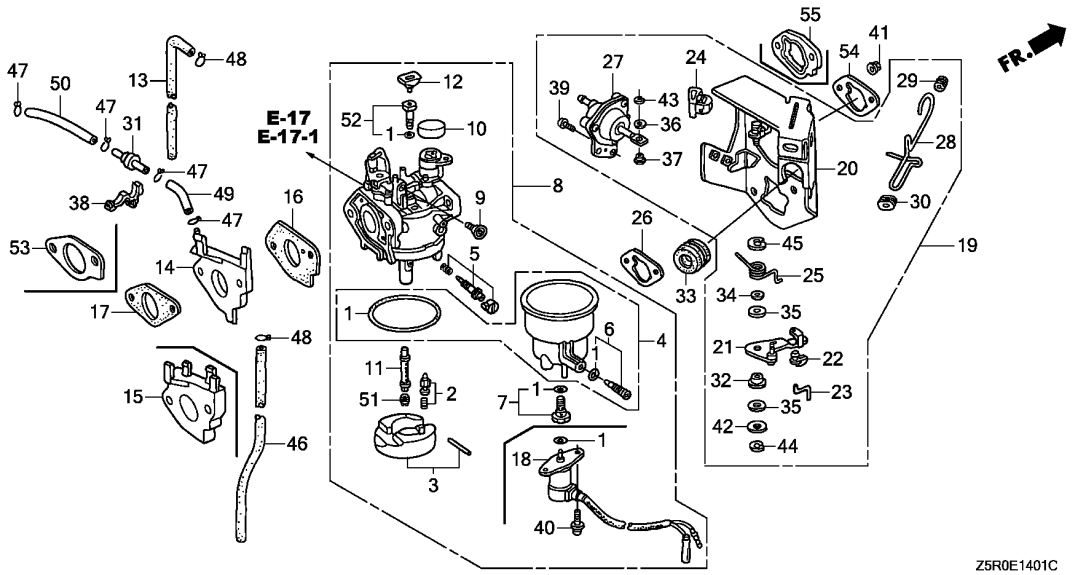

Ref. No.	Part No.	Description	Reqd. QTY GX 390 U1	GX 390 R1	GX 390 U2	GX 390 R2	Serial No.		Parts catalogue code
19)	16260-ZE3-D21	STAY ASSY., MANUAL CHOKE	1	-	-	-	--------	--------	VE39,VKX9,VX39
	16260-ZE2-722	.....	1	-	-	-	--------	--------	VKE9,VXG2
	16260-ZF6-U70	.....	1	-	-	-	--------	--------	VMS2
	16260-ZE2-722	.....	1	-	-	-	--------	1230854	VC2
	16260-ZE3-D21	.....	1	-	-	-	--------	1413205	ED6,EDD2,EDT6,EN6,ENT2,VEP9,VKX4,VPE4,VPE5,VPE9,VPX4,VPX5,VPX9 VS39,VS49,VSD4,VWC,VWE,VXG
	16260-ZE2-722	.....	1	-	-	-	--------	1413205	EDS2,EDS6,VKE4,VPE7,VPX7,VTH4,VWS
	16260-ZE3-D21	.....	1	-	-	-	1230855	1413205	VC2
	16260-ZE3-D22	.....	1	-	-	-	1413206	--------	ED6,EDD2,EDT6,EN6,ENT2,VC2,VEP9,VKX4,VPE4,VPE5,VPE9,VPX4,VPX5 VPX9,VS39,VS49,VSD4,VWC,VWE,VXG
	16260-ZE2-723	.....	1	-	-	-	1413206	--------	EDS2,EDS6,VKE4,VPE7,VPX7,VTH4,VWS
	16260-ZE3-D22	.....	-	1	-	-	--------	--------	ED6,EDD2,EDT6,EN6,ENT2,VC2,VEP9,VKX4,VPE4,VPE5,VPE9,VPX4,VPX5 VPX9,VS39,VS49,VSD4,VWC,VWE,VXG
	16260-ZE2-723	.....	-	1	-	-	--------	--------	EDS2,EDS6,VKE4,VPE7,VPX7,VTH4,VWS
	16260-ZE3-D22	.....	-	-	-	1	--------	--------	ED6,EDD2,EDS6,EDT6,EN6,ENT2,VWS
20	16261-ZE2-702	STAY COMP., SOLENOID	1	1	-	1	--------	--------	ED6,EDD2,EDS2,EDS6,EDT6,EN6,ENT2,VC2,VC2N,VE39,VEP9,VKE4,VKE9 VKX4,VKX9,VMS2,VPE4,VPE5,VPE7,VPE9,VPX4,VPX5,VPX7,VPX9,VS39 VS49,VSD4,VTH4,VWC,VWE,VWS,VX39,VXG,VXG2
21	16262-ZE2-711	LEVER, CHOKE	1	1	-	1	--------	--------	ED6,EDD2,EDS2,EDS6,EDT6,EN6,ENT2,VC2,VC2N,VE39,VEP9,VKE4,VKE9 VKX4,VKX9,VMS2,VPE4,VPE5,VPE7,VPE9,VPX4,VPX5,VPX7,VPX9,VS39 VS49,VSD4,VTH4,VWC,VWE,VWS,VX39,VXG,VXG2
22	16263-ZA0-000	JOINT, ROD	1	1	-	1	--------	--------	ED6,EDD2,EDS2,EDS6,EDT6,EN6,ENT2,VC2,VC2N,VE39,VEP9,VKE4,VKE9 VKX4,VKX9,VMS2,VPE4,VPE5,VPE7,VPE9,VPX4,VPX5,VPX7,VPX9,VS39 VS49,VSD4,VTH4,VWC,VWE,VWS,VX39,VXG,VXG2
23	16264-ZE2-701	ROD, CHOKE	1	1	-	1	--------	--------	ED6,EDD2,EDS2,EDS6,EDT6,EN6,ENT2,VC2,VC2N,VE39,VEP9,VKE4,VKE9 VKX4,VKX9,VMS2,VPE4,VPE5,VPE7,VPE9,VPX4,VPX5,VPX7,VPX9,VS39 VS49,VSD4,VTH4,VWC,VWE,VWS,VX39,VXG,VXG2

Ref. No.	Part No.	Description	Reqd. QTY GX 390 U1	GX 390 R1	GX 390 U2	GX 390 R2	Serial No.		Parts catalogue code
24	16265-ZE2-721	STOPPER, CHOKE ROD	1	1	-	1	--------	--------	ED6,EDD2,EDS2,EDS6,EDT6,EN6,ENT2,VC2,VC2N,VE39,VEP9,VKE4,VKE9 VKX4,VKX9,VMS2,VPE4,VPE5,VPE7,VPE9,VPX4,VPX5,VPX7,VPX9,VS39 VS49,VSD4,VTH4,VWC,VWE,VWS,VX39,VXG,VXG2
25	16268-ZE2-721	SPRING, MANUAL CHOKE	1	1	-	1	--------	--------	ED6,EDD2,EDS2,EDS6,EDT6,EN6,ENT2,VC2,VC2N,VE39,VEP9,VKE4,VKE9 VKX4,VKX9,VMS2,VPE4,VPE5,VPE7,VPE9,VPX4,VPX5,VPX7,VPX9,VS39 VS49,VSD4,VTH4,VWC,VWE,VWS,VX39,VXG,VXG2
26	16269-ZA0-800	PACKING, AIR CLEANER	1	1	-	-	--------	--------	ED6,EDD2,EDS2,EDS6,EDT6,EN6,ENT2,VC2,VC2N,VE39,VEP9,VKE4,VKE9 VKX4,VKX9,VMS2,VPE4,VPE5,VPE7,VPE9,VPX4,VPX5,VPX7,VPX9,VS39 VS49,VSD4,VTH4,VWC,VWE,VWS,VX39,VXG,VXG2
			-	-	-	1	--------	--------	ED6,EDD2,EN6,ENT2,VWS
	17228-Z5T-000	.....	-	-	-	1	--------	--------	EDS6,EDT6
27	16400-ZE2-704	DIAPHRAGM ASSY.	1	-	-	-	--------	--------	VC2N
	16400-ZE2-703	.....	1	-	-	-	--------	--------	VE39,VKE9,VKX9,VX39,VXG2
			1	-	-	-	--------	1413205	ED6,EDD2,EDS2,EDS6,EDT6,EN6,ENT2,VC2,VEP9,VKE4,VKX4,VPE4,VPE5 VPE7,VPE9,VPX4,VPX5,VPX7,VPX9,VS39,VS49,VSD4,VTH4,VWC,VWE,VWS VXG
	16400-ZE2-704	.....	1	-	-	-	1413206	--------	ED6,EDD2,EDS2,EDS6,EDT6,EN6,ENT2,VC2,VEP9,VKE4,VKX4,VPE4,VPE5 VPE7,VPE9,VPX4,VPX5,VPX7,VPX9,VS39,VS49,VSD4,VTH4,VWC,VWE,VWS VXG
			-	1	-	1	--------	--------	ED6,EDD2,EDS2,EDS6,EDT6,EN6,ENT2,VC2,VEP9,VKE4,VKX4,VPE4,VPE5 VPE7,VPE9,VPX4,VPX5,VPX7,VPX9,VS39,VS49,VSD4,VTH4,VWC,VWE,VWS VXG
28	16611-ZE2-711	ROD, CHOKE CONTROL	1	1	-	-	--------	--------	EDS2,EDS6,VKE4,VKE9,VMS2,VPE7,VPX7,VTH4,VWS,VXG2
	16611-ZE3-D21	.....	1	-	-	-	--------	--------	ED6,EDD2,EDT6,EN6,ENT2,VC2N,VE39,VEP9,VKX4,VKX9,VPE4,VPE5,VPE9 VPX4,VPX5,VPX9,VS39,VS49,VSD4,VWC,VWE,VX39,VXG
	16611-ZE2-711	.....	1	-	-	-	--------	1230854	VC2
	16611-ZE3-D21	.....	1	-	-	-	1230855	--------	VC2
			-	1	-	-	--------	--------	ED6,EDD2,EDT6,EN6,ENT2,VC2,VEP9,VKX4,VPE4,VPE5,VPE9,VPX4,VPX5 VPX9,VS39,VS49,VSD4,VWC,VWE,VXG
			-	-	-	1	--------	--------	ED6,EDD2,EDS6,EDT6,EN6,ENT2,VWS
29	16613-893-000	GROMMET, CHOKE ROD	1	1	-	1	--------	--------	ED6,EDD2,EDS2,EDS6,EDT6,EN6,ENT2,VC2,VC2N,VE39,VEP9,VKE4,VKE9 VKX4,VKX9,VMS2,VPE4,VPE5,VPE7,VPE9,VPX4,VPX5,VPX7,VPX9,VS39 VS49,VSD4,VTH4,VWC,VWE,VWS,VX39,VXG,VXG2
30	16615-893-000	GUIDE, CHOKE ROD	1	1	-	1	--------	--------	ED6,EDD2,EDS2,EDS6,EDT6,EN6,ENT2,VC2,VC2N,VE39,VEP9,VKE4,VKE9 VKX4,VKX9,VMS2,VPE4,VPE5,VPE7,VPE9,VPX4,VPX5,VPX7,VPX9,VS39 VS49,VSD4,VTH4,VWC,VWE,VWS,VX39,VXG,VXG2
31	36135-ZF6-D41	VALVE, DASHPOT CHECK	1	1	-	1	--------	--------	ED6,EDD2,EDS2,EDS6,EDT6,EN6,ENT2,VC2,VC2N,VE39,VEP9,VKE4,VKE9 VKX4,VKX9,VPE4,VPE5,VPE7,VPE9,VPX4,VPX5,VPX7,VPX9,VS39,VS49 VSD4,VTH4,VWC,VWE,VWS,VX39,VXG,VXG2
32	53149-964-003	BUSH, ARM PIVOT	1	1	-	1	--------	--------	ED6,EDD2,EDS2,EDS6,EDT6,EN6,ENT2,VC2,VC2N,VE39,VEP9,VKE4,VKE9 VKX4,VKX9,VMS2,VPE4,VPE5,VPE7,VPE9,VPX4,VPX5,VPX7,VPX9,VS39 VS49,VSD4,VTH4,VWC,VWE,VWS,VX39,VXG,VXG2
33	88911-MJ3-000	GROMMET, FENDER	1	1	-	1	--------	--------	ED6,EDD2,EDS2,EDS6,EDT6,EN6,ENT2,VAA1,VAA8,VC2,VC2N,VE39,VEP9 VKE4,VKE9,VKX4,VKX9,VMS2,VPE4,VPE5,VPE7,VPE9,VPX4,VPX5,VPX7 VPX9,VS39,VS49,VSD4,VTH4,VWC,VWE,VWS,VX39,VXG,VXG2
34	90431-ZE2-700	WASHER, CHOKE LEVER	1	1	-	1	--------	--------	ED6,EDD2,EDS2,EDS6,EDT6,EN6,ENT2,VC2,VC2N,VE39,VEP9,VKE4,VKE9 VKX4,VKX9,VMS2,VPE4,VPE5,VPE7,VPE9,VPX4,VPX5,VPX7,VPX9,VS39 VS49,VSD4,VTH4,VWC,VWE,VWS,VX39,VXG,VXG2
35	90432-ZE2-700	SEAL, CHOKE LEVER	2	2	-	2	--------	--------	ED6,EDD2,EDS2,EDS6,EDT6,EN6,ENT2,VC2,VC2N,VE39,VEP9,VKE4,VKE9 VKX4,VKX9,VMS2,VPE4,VPE5,VPE7,VPE9,VPX4,VPX5,VPX7,VPX9,VS39 VS49,VSD4,VTH4,VWC,VWE,VWS,VX39,VXG,VXG2
36	90433-ZE2-700	WASHER, THRUST, 2.7X8	1	1	-	1	--------	--------	ED6,EDD2,EDS2,EDS6,EDT6,EN6,ENT2,VC2,VC2N,VE39,VEP9,VKE4,VKE9 VKX4,VKX9,VPE4,VPE5,VPE7,VPE9,VPX4,VPX5,VPX7,VPX9,VS39,VS49 VSD4,VTH4,VWC,VWE,VWS,VX39,VXG,VXG2

CARBURETOR(2)

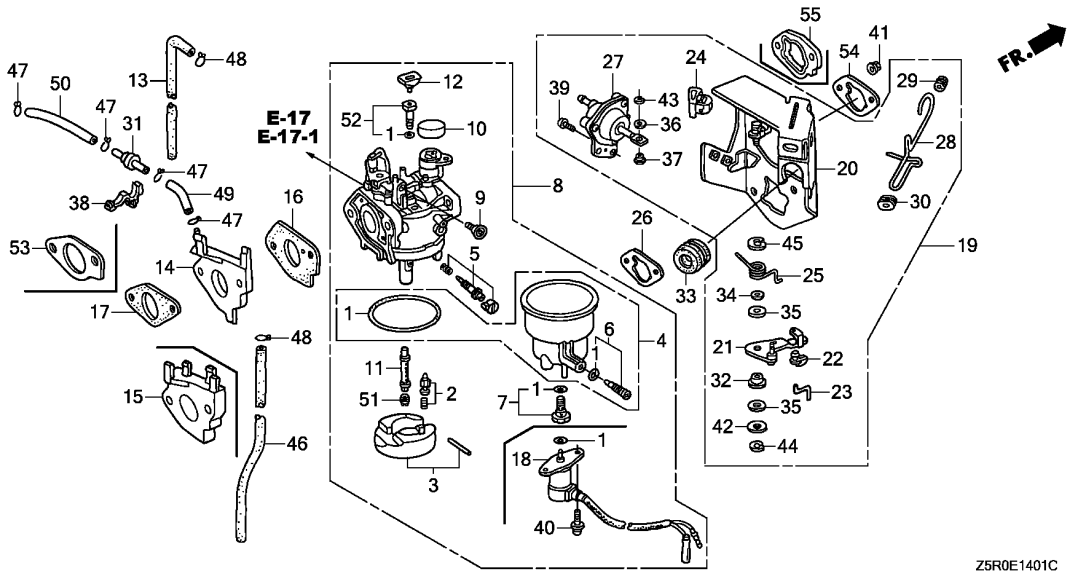

Ref. No.	Part No.	Description	Reqd. QTY GX 390 U1	GX 390 R1	GX 390 U2	GX 390 R2	Serial No.	Parts catalogue code
37	90434-ZE2-700	COLLAR, LEVER	1	1	-	1	-------- --------	ED6,EDD2,EDS2,EDS6,EDT6,EN6,ENT2,VC2,VC2N,VE39,VEP9,VKE4,VKE9 VKX4,VKX9,VPE4,VPE5,VPE7,VPE9,VPX4,VPX5,VPX7,VPX9,VS39,VS49 VSD4,VTH4,VWC,VWE,VWS,VX39,VXG,VXG2
38	90650-SD9-003	CLIP, WIRE HARNESS	1	-	-	1	-------- --------	ED6,EDD2,EDS2,EDS6,EDT6,EN6,ENT2,VC2,VS49,VSD4,VTH4,VWC,VWE VWS,VXG
			-	1	-	-	-------- --------	ED6,EDD2,EDS2,EDS6,EDT6,EN6,ENT2,VS49,VSD4,VTH4,VWC,VWE,VWS VXG
39	93500-05012-0A	SCREW, PAN, 5X12	2	2	-	2	-------- --------	ED6,EDD2,EDS2,EDS6,EDT6,EN6,ENT2,VC2,VC2N,VE39,VEP9,VKE4,VKE9 VKX4,VKX9,VPE4,VPE5,VPE7,VPE9,VPX4,VPX5,VPX7,VPX9,VS39,VS49 VSD4,VTH4,VWC,VWE,VWS,VX39,VXG,VXG2
40	93892-05012-18	SCREW-WASHER, 5X12	2	2	-	-	-------- --------	ED6,EDD2,EDS2,EDS6,EDT6,EN6,ENT2,VEP9,VKE4,VKE9,VKX4,VKX9,VMS2 VS49,VSD4,VWC,VWE,VWS
			-	-	-	2	-------- --------	ED6,EDD2,EN6,ENT2,VWS
41	94050-06000	NUT, FLANGE, 6MM	2	2	-	2	-------- --------	ED6,EDD2,EDS2,EDS6,EDT6,EN6,ENT2,VAA1,VAA8,VC2,VC2N,VE39,VEP9 VKE4,VKE9,VKX4,VKX9,VMS2,VPE4,VPE5,VPE7,VPE9,VPX4,VPX5,VPX7 VPX9,VS39,VS49,VSD4,VTH4,VWC,VWE,VWS,VX39,VXG,VXG2
42	94103-05000	WASHER, PLAIN, 5MM	1	1	-	1	-------- --------	ED6,EDD2,EDS2,EDS6,EDT6,EN6,ENT2,VC2,VC2N,VE39,VEP9,VKE4,VKE9 VKX4,VKX9,VMS2,VPE4,VPE5,VPE7,VPE9,VPX4,VPX5,VPX7,VPX9,VS39 VS49,VSD4,VTH4,VWC,VWE,VWS,VX39,VXG,VXG2
43	94540-02010	E-RING, 2MM	1	1	-	1	-------- --------	ED6,EDD2,EDS2,EDS6,EDT6,EN6,ENT2,VC2,VC2N,VE39,VEP9,VKE4,VKE9 VKX4,VKX9,VPE4,VPE5,VPE7,VPE9,VPX4,VPX5,VPX7,VPX9,VS39,VS49 VSD4,VTH4,VWC,VWE,VWS,VX39,VXG,VXG2
44	94540-04010	E-RING, 4MM	1	1	-	1	-------- --------	ED6,EDD2,EDS2,EDS6,EDT6,EN6,ENT2,VC2,VC2N,VE39,VEP9,VKE4,VKE9 VKX4,VKX9,VMS2,VPE4,VPE5,VPE7,VPE9,VPX4,VPX5,VPX7,VPX9,VS39 VS49,VSD4,VTH4,VWC,VWE,VWS,VX39,VXG,VXG2
45	94540-07010	E-RING, 7MM	1	1	-	1	-------- --------	ED6,EDD2,EDS2,EDS6,EDT6,EN6,ENT2,VC2,VC2N,VE39,VEP9,VKE4,VKE9 VKX4,VKX9,VMS2,VPE4,VPE5,VPE7,VPE9,VPX4,VPX5,VPX7,VPX9,VS39 VS49,VSD4,VTH4,VWC,VWE,VWS,VX39,VXG,VXG2

Ref. No.	Part No.	Description	Reqd. QTY GX 390 U1	GX 390 R1	GX 390 U2	GX 390 R2	Serial No.		Parts catalogue code
46	95001-45300-40	TUBE, FUEL, 4.5X300 (95001-45001-60M)	1	1	-	-	--------	--------	VS49,VSD4,VTH4
47	95002-02070	CLIP, TUBE(B7) ·····	4	4	-	4	--------	--------	ED6,EDD2,EDS2,EDS6,EDT6,EN6,ENT2,VC2,VC2N,VE39,VEP9,VKE4,VKE9 VKX4,VKX9,VPE4,VPE5,VPE7,VPE9,VPX4,VPX5,VPX7,VPX9,VS39,VS49 VSD4,VTH4,VWC,VWE,VWS,VX39,VXG,VXG2
48	95002-02080	CLIP, TUBE(B8) ·····	2	2	-	-	--------	--------	VS49,VSD4,VTH4
49	95005-35075-10	TUBE, 3.5X75(95005-35001-10M)	1	1	-	1	--------	--------	ED6,EDD2,EDS2,EDS6,EDT6,EN6,ENT2,VC2,VC2N,VE39,VEP9,VKE4,VKE9 VKX4,VKX9,VPE4,VPE5,VPE7,VPE9,VPX4,VPX5,VPX7,VPX9,VS39,VS49 VSD4,VTH4,VWC,VWE,VWS,VX39,VXG,VXG2
50	95005-35130-10	TUBE, 3.5X130(95005-35001-10M)	1	1	-	1	--------	--------	ED6,EDD2,EDS2,EDS6,EDT6,EN6,ENT2,VC2,VC2N,VE39,VEP9,VKE4,VKE9 VKX4,VKX9,VPE4,VPE5,VPE7,VPE9,VPX4,VPX5,VPX7,VPX9,VS39,VS49 VSD4,VTH4,VWC,VWE,VWS,VX39,VXG,VXG2
51	99101-ZH8-0980	JET, MAIN, #98 ·····	(1)	(1)	-	-	--------	--------	ED6,EDD2,EDS2,EDS6,EDT6,EN6,ENT2,VAA1,VAA8,VEP9,VKE4,VKE9,VKX4 VKX9,VMS2,VS49,VSD4,VTH4,VWC,VWE,VWS
	99101-ZH8-1000	JET, MAIN, #100 ·····	(1)	(1)	-	-	--------	--------	ED6,EDD2,EDS2,EDS6,EDT6,EN6,ENT2,VAA1,VAA8,VEP9,VKE4,VKE9,VKX4 VKX9,VMS2,VS49,VSD4,VTH4,VWC,VWE,VWS
	99101-ZH8-1020	JET, MAIN, #102 ·····	1	1	-	-	--------	--------	ED6,EDD2,EDS2,EDS6,EDT6,EN6,ENT2,VAA1,VAA8,VEP9,VKE4,VKE9,VKX4 VKX9,VMS2,VS49,VSD4,VTH4,VWC,VWE,VWS
	99101-ZH8-1050	JET, MAIN, #105 ·····	(1)	(1)	-	-	--------	--------	EDS2,EDS6,EDT6,VC2,VC2N,VE39,VPE4,VPE5,VPE7,VPE9,VPX4,VPX5 VPX7,VPX9,VS39,VX39,VXG,VXG2
	99101-ZH8-1020	JET, MAIN, #102 ·····	(1)	(1)	-	-	--------	--------	VC2,VC2N,VE39,VPE4,VPE5,VPE7,VPE9,VPX4,VPX5,VPX7,VPX9,VS39 VX39,VXG,VXG2
	99101-ZH8-1080	JET, MAIN, #108 ·····	1	1	-	-	--------	--------	VC2,VC2N,VE39,VPE4,VPE5,VPE7,VPE9,VPX4,VPX5,VPX7,VPX9,VS39 VX39,VXG,VXG2
	99101-ZH8-0980	JET, MAIN, #98 ·····	-	-	-	(1)	--------	--------	ED6,EDD2,EN6,ENT2,VWS
	99101-ZH8-1000	JET, MAIN, #100 ·····	-	-	-	(1)	--------	--------	ED6,EDD2,EN6,ENT2,VWS
	99101-ZH8-1020	JET, MAIN, #102 ·····	-	-	-	1	--------	--------	ED6,EDD2,EN6,ENT2,VWS
52	99204-ZA0-0450	JET SET, PILOT, #45 ·····	1	1	-	-	--------	--------	ED6,EDD2,EDS2,EDS6,EDT6,EN6,ENT2,VAA1,VAA8,VC2,VC2N,VE39,VEP9 VKE4,VKE9,VKX4,VKX9,VMS2,VPE4,VPE5,VPE7,VPE9,VPX4,VPX5,VPX7 VPX9,VS39,VS49,VSD4,VTH4,VWC,VWE,VWS,VX39,VXG,VXG2
			-	-	-	1	--------	--------	ED6,EDD2,EN6,ENT2,VWS
53	16212-Z5T-000	PACKING, CARBURETOR INSULATOR	-	-	-	1	--------	--------	ED6,EDD2,EDS6,EDT6,EN6,ENT2,VWS
54	16269-ZA0-800	PACKING, AIR CLEANER ·····	1	1	-	-	--------	--------	ED6,EDD2,EDS2,EDS6,EDT6,EN6,ENT2,VC2,VC2N,VE39,VEP9,VKE4,VKE9 VKX4,VKX9,VMS2,VPE4,VPE5,VPE7,VPE9,VPX4,VPX5,VPX7,VPX9,VS39 VS49,VSD4,VTH4,VWC,VWE,VWS,VX39,VXG,VXG2
			-	-	-	1	--------	--------	ED6,EDD2,EN6,ENT2,VWS
55	16220-ZA0-702	SPACER COMP., CARBURETOR ····	-	-	-	1	--------	--------	EDS6,EDT6

2

AIR CLEANER(1)

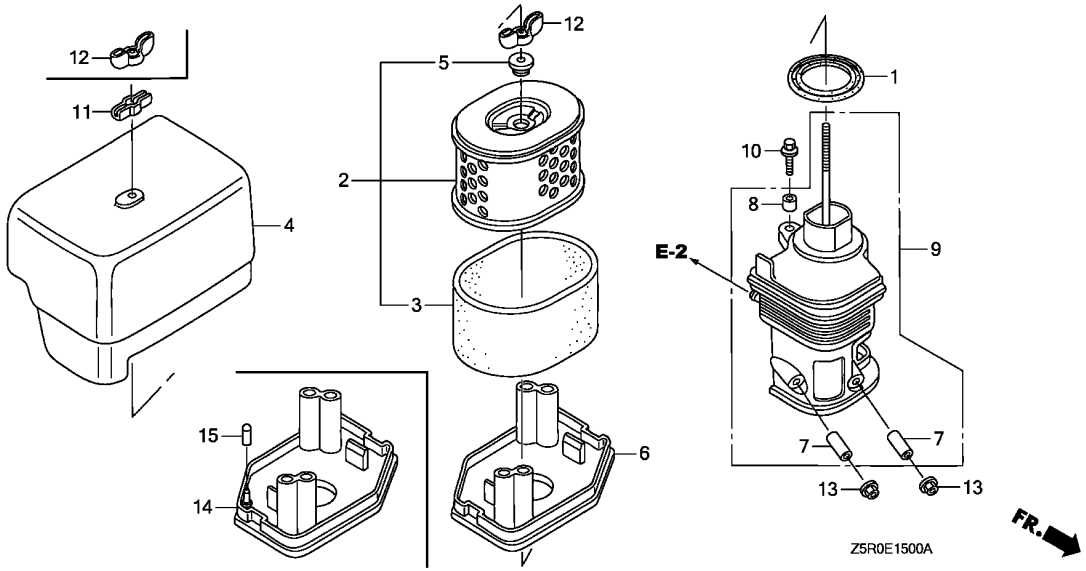

Ref. No.	L.O.N.	(Relative ref. Number) Description	F.R.T.

Ref. No.	Part No.	Description	Reqd. QTY GX 390 U1	GX 390 R1	GX 390 U2	GX 390 R2	Serial No.	Parts catalogue code
1	16271-ZE2-010	PACKING, ELBOW	1	1	-	-	-------- --------	HA2,HJA2,LKE,LX2,LXE2,LXE4,LXE8,LXQ4,LXU,PA2,PAE2,PXE8,PXM8 PXU,PXU4,QA2,QA26,QAA2,QAE2,QAE6,QAW,QE,QHB4,QK4,QKA4,QKB2 QMEO,QNB2,QND,QNE2,QNE6,QNE8,QNE9,QNK,QNR2,QNR6,QTR2,QWA2,QXB QXB7,QXB9,QXE4,QXE6,QXE7,QXE8,QXE9,QXEB,QXH9,QXQ4,QXQ7,QXU SCK4,SHQ4,SM32,SM34,SMC1,SMD3,SMEO,SME6,SMX2,SMX4,STC4,SWA4 SXB,SXB7,SXB9,SXE4,SXE7,SXE8,SXE9,SXEB,SXQ4,SXU,VA2,VAC2,VAG2 VCN2,VD2,VDB2,VDE2,VEP7,VK2,VKB2,VM2,VMA2,VME2,VN17,VN27,VNG1 VNG2,VNS9,VSD,VSD7,VSD9,VWA2,VWC7,VWC9,VWT4,VX8,VXB,VXB7,VXB9 VXE2,VXE4,VXE6,VXE7,VXE8,VXE9,VXEB,VXP7,VXQ4
2	17210-ZE3-010	ELEMENT, AIR CLEANER	1	1	-	-	-------- --------	HA2,HJA2,LKE,LX2,LXE2,LXE4,LXE8,LXQ4,LXU,PA2,PAE2,PXE8,PXM8 PXU,PXU4,QA2,QA26,QAA2,QAE2,QAE6,QAW,QE,QHB4,QK4,QKA4,QKB2 QMEO,QNB2,QND,QNE2,QNE6,QNE8,QNE9,QNK,QNR2,QNR6,QTR2,QWA2,QXB QXB7,QXB9,QXE4,QXE6,QXE7,QXE8,QXE9,QXEB,QXH9,QXQ4,QXQ7,QXU SCK4,SHQ4,SM32,SM34,SMC1,SMD3,SMEO,SME6,SMX2,SMX4,STC4,SWA4 SXB,SXB7,SXB9,SXE4,SXE7,SXE8,SXE9,SXEB,SXQ4,SXU,VA2,VAC2,VAG2 VCN2,VD2,VDB2,VDE2,VEP7,VK2,VKB2,VM2,VMA2,VME2,VN17,VN27,VNG1 VNG2,VNS9,VSD,VSD7,VSD9,VWA2,VWC7,VWC9,VWT4,VX8,VXB,VXB7,VXB9 VXE2,VXE4,VXE6,VXE7,VXE8,VXE9,VXEB,VXP7,VXQ4
3	17218-ZE3-000	FILTER, OUTER	1	1	-	-	-------- --------	HA2,HJA2,LKE,LX2,LXE2,LXE4,LXE8,LXQ4,LXU,PA2,PAE2,PXE8,PXM8 PXU,PXU4,QA2,QA26,QAA2,QAE2,QAE6,QAW,QE,QHB4,QK4,QKA4,QKB2 QMEO,QNB2,QND,QNE2,QNE6,QNE8,QNE9,QNK,QNR2,QNR6,QTR2,QWA2,QXB QXB7,QXB9,QXE4,QXE6,QXE7,QXE8,QXE9,QXEB,QXH9,QXQ4,QXQ7,QXU SCK4,SHQ4,SM32,SM34,SMC1,SMD3,SMEO,SME6,SMX2,SMX4,STC4,SWA4 SXB,SXB7,SXB9,SXE4,SXE7,SXE8,SXE9,SXEB,SXQ4,SXU,VA2,VAC2,VAG2 VCN2,VD2,VDB2,VDE2,VEP7,VK2,VKB2,VM2,VMA2,VME2,VN17,VN27,VNG1 VNG2,VNS9,VSD,VSD7,VSD9,VWA2,VWC7,VWC9,VWT4,VX8,VXB,VXB7,VXB9 VXE2,VXE4,VXE6,VXE7,VXE8,VXE9,VXEB,VXP7,VXQ4

AIR CLEANER(1)

Ref. No.	Part No.	Description	Reqd. QTY GX 390 U1	GX 390 R1	GX 390 U2	GX 390 R2	Serial No.		Parts catalogue code
4	17231-ZE3-W01	COVER, AIR CLEANER	1	1	-	-	--------	--------	HA2,HJA2,LKE,LX2,LXE2,LXE4,LXE8,LXQ4,LXU,PA2,PAE2,PXE8,PXM8 PXU,PXU4,QA2,QA26,QAA2,QAE2,QAE6,QAW,QE,QHB4,QK4,QKA4,QKB2 QME0,QNB2,QND,QNE2,QNE6,QNE8,QNE9,QNK,QNR2,QNR6,QTR2,QWA2,QXB QXB7,QXB9,QXE4,QXE6,QXE7,QXE8,QXE9,QXEB,QXH9,QXQ4,QXQ7,QXU SCK4,SHQ4,SM32,SM34,SMC1,SMD3,SME0,SME6,SMX2,SMX4,STC4,SWA4 SXB,SXB7,SXB9,SXE4,SXE7,SXE8,SXE9,SXEB,SXQ4,SXU,VA2,VAC2,VAG2 VCN2,VD2,VDB2,VDE2,VEP7,VK2,VKB2,VM2,VMA2,VME2,VN17,VN27,VNG1 VNG2,VNS9,VSD,VSD7,VSD9,VWA2,VWC7,VWC9,VWT4,VX8,VXB,VXB7,VXB9 VXE2,VXE4,VXE6,VXE7,VXE8,VXE9,VXEB,VXP7,VXQ4
5	17232-891-000	GROMMET, AIR CLEANER	1	1	-	-	--------	--------	HA2,HJA2,LKE,LX2,LXE2,LXE4,LXE8,LXQ4,LXU,PA2,PAE2,PXE8,PXM8 PXU,PXU4,QA2,QA26,QAA2,QAE2,QAE6,QAW,QE,QHB4,QK4,QKA4,QKB2 QME0,QNB2,QND,QNE2,QNE6,QNE8,QNE9,QNK,QNR2,QNR6,QTR2,QWA2,QXB QXB7,QXB9,QXE4,QXE6,QXE7,QXE8,QXE9,QXEB,QXH9,QXQ4,QXQ7,QXU SCK4,SHQ4,SM32,SM34,SMC1,SMD3,SME0,SME6,SMX2,SMX4,STC4,SWA4 SXB,SXB7,SXB9,SXE4,SXE7,SXE8,SXE9,SXEB,SXQ4,SXU,VA2,VAC2,VAG2 VCN2,VD2,VDB2,VDE2,VEP7,VK2,VKB2,VM2,VMA2,VME2,VN17,VN27,VNG1 VNG2,VNS9,VSD,VSD7,VSD9,VWA2,VWC7,VWC9,VWT4,VX8,VXB,VXB7,VXB9 VXE2,VXE4,VXE6,VXE7,VXE8,VXE9,VXEB,VXP7,VXQ4
6	17235-ZH9-N01	NOSE, SILENCER	1	1	-	-	--------	--------	PXM8,PXU4,QHB4,QXB9,QXE9,QXH9,SM34,SMX4,SXB9,SXE9,VSD9,VXB9 VXE9
	17235-ZH9-N00	.....	1	-	-	-	--------	1040439	HA2,HJA2,LKE,LX2,LXE2,LXE4,LXE8,LXQ4,LXU,PA2,PAE2,PXE8,PXU,QA2 QA26,QAA2,QAE2,QAE6,QAW,QE,QK4,QKA4,QKB2,QME0,QND,QNE2,QNE6 QNE8,QNE9,QNK,QNR2,QNR6,QTR2,QWA2,QXB,QXB7,QXE4,QXE6,QXE7,QXE8 QXEB,QXQ4,QXQ7,QXU,SCK4,SHQ4,SM32,SMC1,SMD3,SME0,SME6,SMX2 STC4,SWA4,SXB,SXB7,SXE4,SXE7,SXE8,SXEB,SXQ4,SXU,VA2,VAC2,VAG2 VCN2,VD2,VDB2,VDE2,VEP7,VK2,VKB2,VM2,VMA2,VME2,VN17,VN27,VNG1 VNG2,VSD,VSD7,VWA2,VWC7,VWT4,VX8,VXB,VXB7,VXE2,VXE4,VXE6,VXE7 VXE8,VXEB,VXP7,VXQ4
	17235-ZH9-N01	.....	1	-	-	-	--------	1508710	QNB2,VNS9,VWC9
			1	-	-	-	1040440	--------	HA2,HJA2,LKE,LX2,LXE2,LXE4,LXE8,LXQ4,LXU,PA2,PAE2,PXE8,PXU,QA2 QA26,QAA2,QAE2,QAE6,QAW,QE,QK4,QKA4,QME0,QND,QNE2,QNE6,QNE8 QNE9,QNK,QNR2,QNR6,QXB,QXB7,QXE4,QXE6,QXE7,QXE8,QXEB,QXQ4,QXQ7 QXU,SCK4,SHQ4,SM32,SMC1,SMD3,SME0,SME6,SMX2,STC4,SWA4,SXB,SXB7 SXE4,SXE7,SXE8,SXEB,SXQ4,SXU,VA2,VEP7,VM2,VMA2,VME2,VN27,VSD VSD7,VX8,VXB,VXB7,VXE2,VXE4,VXE6,VXE7,VXE8,VXEB,VXP7,VXQ4
			1	-	-	-	1040440	1508710	QKB2,QTR2,QWA2,VAC2,VAG2,VCN2,VD2,VDB2,VDE2,VK2,VKB2,VN17,VNG1 VNG2,VWA2,VWC7,VWT4
7	17238-ZE2-310	COLLAR, AIR CLEANER	2	2	-	-	--------	--------	HA2,HJA2,LKE,LX2,LXE2,LXE4,LXE8,LXQ4,LXU,PA2,PAE2,PXE8,PXM8 PXU,PXU4,QA2,QA26,QAA2,QAE2,QAE6,QAW,QE,QHB4,QK4,QKA4,QKB2 QME0,QNB2,QND,QNE2,QNE6,QNE8,QNE9,QNK,QNR2,QNR6,QTR2,QWA2,QXB QXB7,QXB9,QXE4,QXE6,QXE7,QXE8,QXE9,QXEB,QXH9,QXQ4,QXQ7,QXU SCK4,SHQ4,SM32,SM34,SMC1,SMD3,SME0,SME6,SMX2,SMX4,STC4,SWA4 SXB,SXB7,SXB9,SXE4,SXE7,SXE8,SXE9,SXEB,SXQ4,SXU,VA2,VAC2,VAG2 VCN2,VD2,VDB2,VDE2,VEP7,VK2,VKB2,VM2,VMA2,VME2,VN17,VN27,VNG1 VNG2,VNS9,VSD,VSD7,VSD9,VWA2,VWC7,VWC9,VWT4,VX8,VXB,VXB7,VXB9 VXE2,VXE4,VXE6,VXE7,VXE8,VXE9,VXEB,VXP7,VXQ4
8	17239-ZE1-000	COLLAR B, AIR CLEANER	1	1	-	-	--------	--------	HA2,HJA2,LKE,LX2,LXE2,LXE4,LXE8,LXQ4,LXU,PA2,PAE2,PXE8,PXM8 PXU,PXU4,QA2,QA26,QAA2,QAE2,QAE6,QAW,QE,QHB4,QK4,QKA4,QKB2 QME0,QNB2,QND,QNE2,QNE6,QNE8,QNE9,QNK,QNR2,QNR6,QTR2,QWA2,QXB QXB7,QXB9,QXE4,QXE6,QXE7,QXE8,QXE9,QXEB,QXH9,QXQ4,QXQ7,QXU SCK4,SHQ4,SM32,SM34,SMC1,SMD3,SME0,SME6,SMX2,SMX4,STC4,SWA4 SXB,SXB7,SXB9,SXE4,SXE7,SXE8,SXE9,SXEB,SXQ4,SXU,VA2,VAC2,VAG2 VCN2,VD2,VDB2,VDE2,VEP7,VK2,VKB2,VM2,VMA2,VME2,VN17,VN27,VNG1 VNG2,VNS9,VSD,VSD7,VSD9,VWA2,VWC7,VWC9,VWT4,VX8,VXB,VXB7,VXB9 VXE2,VXE4,VXE6,VXE7,VXE8,VXE9,VXEB,VXP7,VXQ4

AIR CLEANER(1)

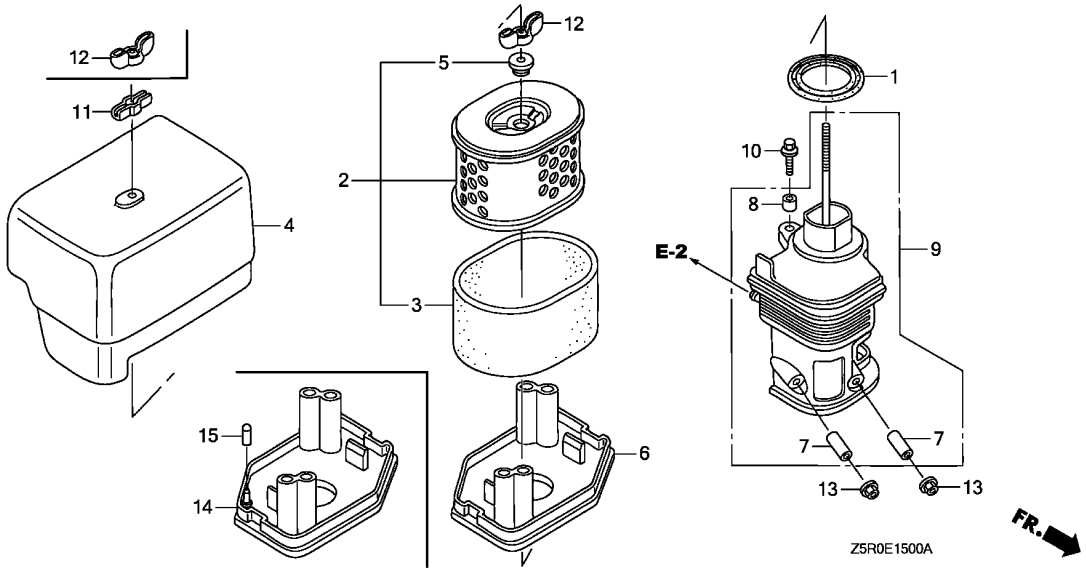

Ref. No.	Part No.	Description	Reqd. QTY GX 390 U1	GX 390 R1	GX 390 U2	GX 390 R2	Serial No.		Parts catalogue code
9	17410-ZH9-N00	ELBOW COMP., AIR CLEANER ····	1	1	-	-	--------	--------	HA2,HJA2,LKE,LX2,LXE2,LXE4,LXE8,LXQ4,LXU,PA2,PAE2,PXE8,PXM8 PXU,PXU4,QA2,QA26,QAA2,QAE2,QAE6,QAW,QE,QHB4,QK4,QKA4,QKB2 QME0,QNB2,QND,QNE2,QNE6,QNE8,QNE9,QNK,QNR2,QNR6,QTR2,QWA2,QXB QXB7,QXB9,QXE4,QXE6,QXE7,QXE8,QXE9,QXEB,QXH9,QXQ4,QXQ7,QXU SCK4,SHQ4,SM32,SM34,SMC1,SMD3,SME0,SME6,SMX2,SMX4,STC4,SWA4 SXB,SXB7,SXB9,SXE4,SXE7,SXE8,SXE9,SXEB,SXQ4,SXU,VA2,VAC2,VAG2 VCN2,VD2,VDB2,VDE2,VEP7,VK2,VKB2,VM2,VMA2,VME2,VN17,VN27,VNG1 VNG2,VNS9,VSD,VSD7,VSD9,VWA2,VWC7,VWC9,VWT4,VX8,VXB,VXB7,VXB9 VXE2,VXE4,VXE6,VXE7,VXE8,VXE9,VXEB,VXP7,VXQ4
10	90009-ZE2-003	BOLT-WASHER, 6X22 ·····	1	1	-	-	--------	--------	HA2,HJA2,LKE,LX2,LXE2,LXE4,LXE8,LXQ4,LXU,PA2,PAE2,PXE8,PXM8 PXU,PXU4,QA2,QA26,QAA2,QAE2,QAE6,QAW,QE,QHB4,QK4,QKA4,QKB2 QME0,QNB2,QND,QNE2,QNE6,QNE8,QNE9,QNK,QNR2,QNR6,QTR2,QWA2,QXB QXB7,QXB9,QXE4,QXE6,QXE7,QXE8,QXE9,QXEB,QXH9,QXQ4,QXQ7,QXU SCK4,SHQ4,SM32,SM34,SMC1,SMD3,SME0,SME6,SMX2,SMX4,STC4,SWA4 SXB,SXB7,SXB9,SXE4,SXE7,SXE8,SXE9,SXEB,SXQ4,SXU,VA2,VAC2,VAG2 VCN2,VD2,VDB2,VDE2,VEP7,VK2,VKB2,VM2,VMA2,VME2,VN17,VN27,VNG1 VNG2,VNS9,VSD,VSD7,VSD9,VWA2,VWC7,VWC9,VWT4,VX8,VXB,VXB7,VXB9 VXE2,VXE4,VXE6,VXE7,VXE8,VXE9,VXEB,VXP7,VXQ4
11	90203-ZA0-800	NUT, WING, 6MM(BLACK) ·····	1	-	-	-	--------	--------	HA2,LXE2,PA2,PAE2,QA2,QA26,QAA2,QAE2,QAE6,QAW,QNE2,QNE6,QNK QNR6,QXE6,SM32,SM34,SMX2,SMX4,VA2,VM2,VMA2,VME2,VXE2,VXE6
			1	-	-	-	--------	1508710	QKB2,QNB2,QTR2,QWA2,VCN2,VD2,VDB2,VK2,VKB2

AIR CLEANER(1)

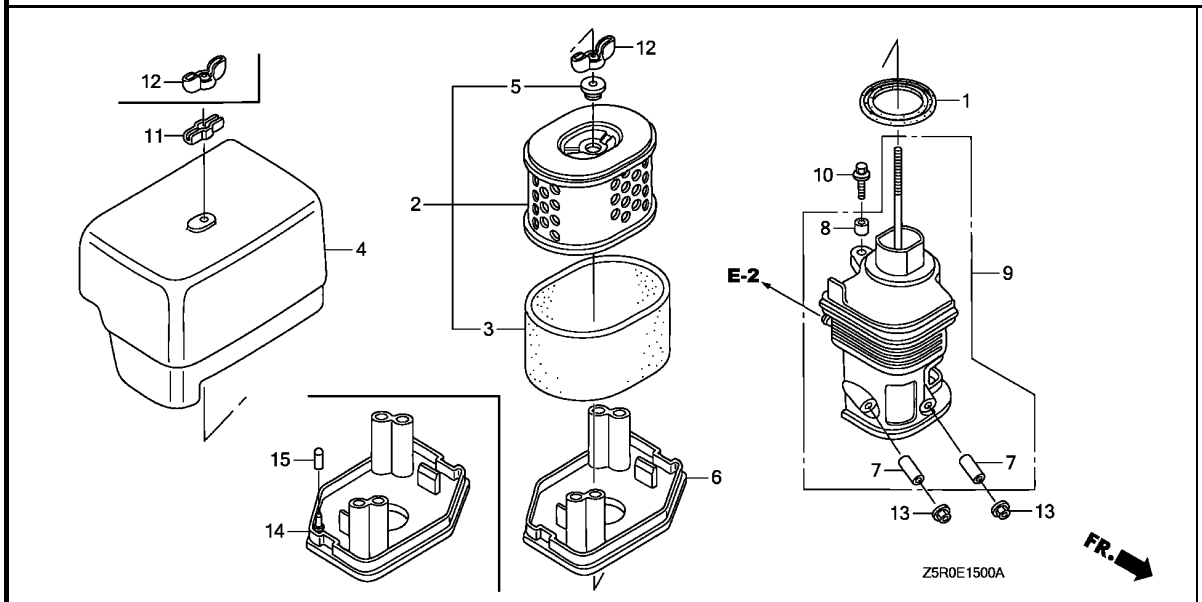

Ref. No.	Part No.	Description	Reqd. QTY GX 390 U1	GX 390 R1	GX 390 U2	GX 390 R2	Serial No.		Parts catalogue code
12	90325-044-000	NUT, TOOL BOX SETTING ·····	1	-	-	-	--------	--------	HA2,LXE2,PA2,PAE2,QA2,QA26,QAA2,QAE2,QAE6,QAW,QNE2,QNE6,QNK QNR6,QXE6,SM32,SM34,SMX2,SMX4,VA2,VM2,VMA2,VME2,VXE2,VXE6
			2	-	-	-	--------	--------	HJA2,LKE,LX2,LXE4,LXE8,LXQ4,LXU,PXE8,PXU,PXU4,QE,QHB4,QK4,QKA4 QMEO,QND,QNE8,QNE9,QNR2,QXB,QXB7,QXB9,QXE4,QXE7,QXE8,QXE9,QXEB QXH9,QXQ4,QXQ7,QXU,SCK4,SHQ4,SMC1,SMD3,SMEO,SME6,STC4,SWA4,SXB SXB7,SXB9,SXE4,SXE7,SXE8,SXE9,SXEB,SXQ4,SXU,VAC2,VAG2,VDE2 VEP7,VN17,VN27,VNG1,VNG2,VNS9,VSD,VSD7,VSD9,VWA2,VWC7,VWC9 VWT4,VX8,VXB,VXB7,VXB9,VXE4,VXE7,VXE8,VXE9,VXEB,VXP7,VXQ4
			1	-	-	-	--------	1508710	QKB2,QNB2,QTR2,QWA2,VCN2,VD2,VDB2,VK2,VKB2
			2	-	-	-	1508711	--------	QKB2,QNB2,QTR2,QWA2,VCN2,VD2,VDB2,VK2,VKB2
			-	2	-	-	--------	--------	PXM8,QKB2,QNB2,QWA2,VAC2,VAG2,VCN2,VD2,VDB2,VDE2,VK2,VKB2,VN17 VNG1,VNS9,VWC7,VWC9,VWT4
13	94050-06000	NUT, FLANGE, 6MM ·····	2	2	-	-	--------	--------	HA2,HJA2,LKE,LX2,LXE2,LXE4,LXE8,LXQ4,LXU,PA2,PAE2,PXE8,PXM8 PXU,PXU4,QA2,QA26,QAA2,QAE2,QAE6,QAW,QE,QHB4,QK4,QKA4,QKB2 QMEO,QNB2,QND,QNE2,QNE6,QNE8,QNE9,QNK,QNR2,QNR6,QTR2,QWA2,QXB QXB7,QXB9,QXE4,QXE6,QXE7,QXE8,QXE9,QXEB,QXH9,QXQ4,QXQ7,QXU SCK4,SHQ4,SM32,SM34,SMC1,SMD3,SMEO,SME6,SMX2,SMX4,STC4,SWA4 SXB,SXB7,SXB9,SXE4,SXE7,SXE8,SXE9,SXEB,SXQ4,SXU,VA2,VAC2,VAG2 VCN2,VD2,VDB2,VDE2,VEP7,VK2,VKB2,VM2,VMA2,VME2,VN17,VN27,VNG1 VNG2,VNS9,VSD,VSD7,VSD9,VWA2,VWC7,VWC9,VWT4,VX8,VXB,VXB7,VXB9 VXE2,VXE4,VXE6,VXE7,VXE8,VXE9,VXEB,VXP7,VXQ4
14	17235-Z5R-800	NOSE, SILENCER ·····	1	-	-	-	1508711	--------	QKB2,QNB2,QTR2,QWA2,VAC2,VAG2,VCN2,VD2,VDB2,VDE2,VK2,VKB2,VN17 VNG1,VNG2,VNS9,VWA2,VWC7,VWC9,VWT4
			-	1	-	-	--------	--------	QKB2,QNB2,QWA2,VAC2,VAG2,VCN2,VD2,VDB2,VDE2,VK2,VKB2,VN17,VNG1 VNS9,VWC7,VWC9,VWT4
15	90634-ZL8-H00	CAP, SEALING ·····	1	-	-	-	1508711	--------	QKB2,QNB2,QTR2,QWA2,VAC2,VAG2,VCN2,VD2,VDB2,VDE2,VK2,VKB2,VN17 VNG1,VNG2,VNS9,VWA2,VWC7,VWC9,VWT4
			-	1	-	-	--------	--------	QKB2,QNB2,QWA2,VAC2,VAG2,VCN2,VD2,VDB2,VDE2,VK2,VKB2,VN17,VNG1 VNS9,VWC7,VWC9,VWT4

AIR CLEANER(2)

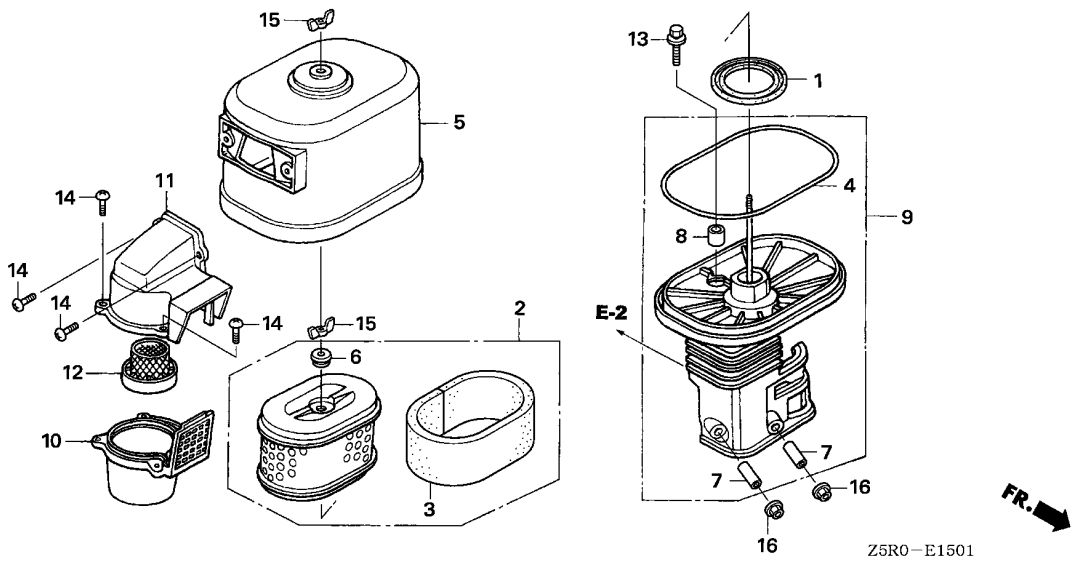

Ref. No.	L.O.N.	(Relative ref. Number) Description	F.R.T.

Ref. No.	Part No.	Description	Reqd. QTY GX 390 U1	GX 390 R1	GX 390 U2	GX 390 R2	Serial No.		Parts catalogue code
1	16271-ZE2-010	PACKING, ELBOW ·····	1	-	-	-	--------	--------	QC2,QDW9,QSC2,QWA4,QWC4,QWH2,QWT2,QXC4,QXC6,QXC9,QXS4,SNC
2	17210-ZE3-010	ELEMENT, AIR CLEANER ·····	1	-	-	-	--------	--------	QC2,QDW9,QSC2,QWA4,QWC4,QWH2,QWT2,QXC4,QXC6,QXC9,QXS4,SNC
3	17218-ZE3-000	FILTER, OUTER ·····	1	-	-	-	--------	--------	QC2,QDW9,QSC2,QWA4,QWC4,QWH2,QWT2,QXC4,QXC6,QXC9,QXS4,SNC
4	17219-ZE3-840	PACKING, AIR CLEANER COVER ··	1	-	-	-	--------	--------	QC2,QDW9,QSC2,QWA4,QWC4,QWH2,QWT2,QXC4,QXC6,QXC9,QXS4,SNC
5	17230-ZE3-841	COVER COMP., AIR CLEANER (CYCLONE)	1	-	-	-	--------	--------	QC2,QDW9,QSC2,QWA4,QWC4,QWH2,QWT2,QXC4,QXC6,QXC9,QXS4,SNC
6	17232-891-000	GROMMET, AIR CLEANER ·····	1	-	-	-	--------	--------	QC2,QDW9,QSC2,QWA4,QWC4,QWH2,QWT2,QXC4,QXC6,QXC9,QXS4,SNC
7	17238-ZE2-310	COLLAR, AIR CLEANER ·····	2	-	-	-	--------	--------	QC2,QDW9,QSC2,QWA4,QWC4,QWH2,QWT2,QXC4,QXC6,QXC9,QXS4,SNC
8	17239-ZE3-840	COLLAR B, AIR CLEANER ·····	1	-	-	-	--------	--------	QC2,QDW9,QSC2,QWA4,QWC4,QWH2,QWT2,QXC4,QXC6,QXC9,QXS4,SNC
9	17410-ZE3-840	ELBOW COMP., AIR CLEANER ····	1	-	-	-	--------	--------	QC2,QDW9,QSC2,QWA4,QWC4,QWH2,QWT2,QXC4,QXC6,QXC9,QXS4,SNC
10	17470-ZE3-842	CASE COMP., PRE AIR CLEANER ·	1	-	-	-	--------	--------	QC2,QDW9,QSC2,QWA4,QWC4,QWH2,QWT2,QXC4,QXC6,QXC9,QXS4,SNC
11	17475-ZE3-841	CAP, PRE AIR CLEANER ·····	1	-	-	-	--------	--------	QC2,QDW9,QSC2,QWA4,QWC4,QWH2,QWT2,QXC4,QXC6,QXC9,QXS4,SNC
12	17476-ZE3-841	GUIDE, PRE AIR CLEANER ·····	1	-	-	-	--------	--------	QC2,QDW9,QSC2,QWA4,QWC4,QWH2,QWT2,QXC4,QXC6,QXC9,QXS4,SNC
13	90009-ZE2-003	BOLT-WASHER, 6X22 ·····	1	-	-	-	--------	--------	QC2,QDW9,QSC2,QWA4,QWC4,QWH2,QWT2,QXC4,QXC6,QXC9,QXS4,SNC
14	90142-MB0-000	SCREW, PAN, 5X16.5 ·····	5	-	-	-	--------	--------	QC2,QDW9,QSC2,QWA4,QWC4,QWH2,QWT2,QXC4,QXC6,QXC9,QXS4,SNC
15	90325-044-000	NUT, TOOL BOX SETTING ·····	2	-	-	-	--------	--------	QC2,QDW9,QSC2,QWA4,QWC4,QWH2,QWT2,QXC4,QXC6,QXC9,QXS4,SNC
16	94050-06000	NUT, FLANGE, 6MM ·····	2	-	-	-	--------	--------	QC2,QDW9,QSC2,QWA4,QWC4,QWH2,QWT2,QXC4,QXC6,QXC9,QXS4,SNC

AIR CLEANER(3)

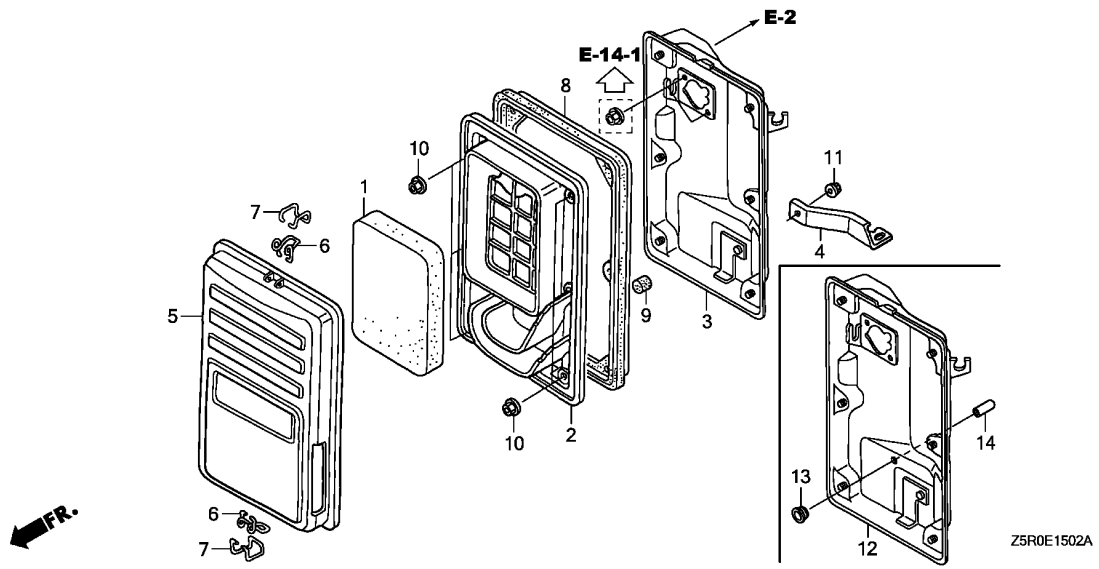

Ref. No.	L.O.N.	(Relative ref. Number) Description	F.R.T.

Ref. No.	Part No.	Description	Reqd. QTY GX 390 U1	GX 390 R1	GX 390 U2	GX 390 R2	Serial No.		Parts catalogue code
1	17211-899-000	ELEMENT, AIR CLEANER ·····	1	1	-	-	--------	--------	VC2,VC2N,VE39,VEP9,VKE4,VKE9,VKX4,VKX9,VMS2,VPE4,VPE5,VPE7 VPE9,VPX4,VPX5,VPX7,VPX9,VS39,VS49,VSD4,VTH4,VWC,VWE,VX39,VXG VXG2
2	17212-Z5R-000	SEPARATOR, AIR CLEANER ·····	1	-	-	-	--------	--------	VC2N
	17212-ZB4-003	·····	1	-	-	-	--------	1522959	VC2,VE39,VEP9,VKE4,VKE9,VKX4,VKX9,VMS2,VPE4,VPE5,VPE7,VPE9 VPX4,VPX5,VPX7,VPX9,VS39,VS49,VSD4,VTH4,VWC,VWE,VX39,VXG,VXG2
	17212-Z5R-000	·····	1	-	-	-	1522960	--------	VC2,VE39,VEP9,VKE4,VKE9,VKX4,VKX9,VMS2,VPE4,VPE5,VPE7,VPE9 VPX4,VPX5,VPX7,VPX9,VS39,VS49,VSD4,VTH4,VWC,VWE,VX39,VXG,VXG2
			-	1	-	-	--------	--------	VC2,VEP9,VKE4,VKX4,VPE4,VPE5,VPE7,VPE9,VPX4,VPX5,VPX7,VPX9 VS39,VS49,VSD4,VTH4,VWC,VWE,VXG
3	17220-ZB4-003	CASE COMP., AIR CLEANER ·····	1	-	-	-	--------	1522959	VC2,VE39,VEP9,VKE4,VKE9,VKX4,VKX9,VMS2,VPE4,VPE5,VPE7,VPE9 VPX4,VPX5,VPX7,VPX9,VS39,VS49,VSD4,VTH4,VWC,VWE,VX39,VXG,VXG2
4	17222-ZC2-000	STAY, AIR CLEANER ·····	1	1	-	-	--------	--------	VC2,VC2N,VE39,VEP9,VKE4,VKE9,VKX4,VKX9,VMS2,VPE4,VPE5,VPE7 VPE9,VPX4,VPX5,VPX7,VPX9,VS39,VS49,VSD4,VTH4,VWC,VWE,VX39,VXG VXG2
5	17231-899-000	COVER COMP., AIR CLEANER ····	1	1	-	-	--------	--------	VC2,VC2N,VE39,VEP9,VKE4,VKE9,VKX4,VKX9,VMS2,VPE4,VPE5,VPE7 VPE9,VPX4,VPX5,VPX7,VPX9,VS39,VS49,VSD4,VTH4,VWC,VWE,VX39,VXG VXG2
6	17235-899-000	CLIP A, AIR CLEANER WIRE ····	2	2	-	-	--------	--------	VC2,VC2N,VE39,VEP9,VKE4,VKE9,VKX4,VKX9,VMS2,VPE4,VPE5,VPE7 VPE9,VPX4,VPX5,VPX7,VPX9,VS39,VS49,VSD4,VTH4,VWC,VWE,VX39,VXG VXG2
7	17236-899-000	CLIP B, AIR CLEANER WIRE ····	2	2	-	-	--------	--------	VC2,VC2N,VE39,VEP9,VKE4,VKE9,VKX4,VKX9,VMS2,VPE4,VPE5,VPE7 VPE9,VPX4,VPX5,VPX7,VPX9,VS39,VS49,VSD4,VTH4,VWC,VWE,VX39,VXG VXG2
8	17252-899-000	SEAL, AIR CLEANER ·····	1	1	-	-	--------	--------	VC2,VC2N,VE39,VEP9,VKE4,VKE9,VKX4,VKX9,VMS2,VPE4,VPE5,VPE7 VPE9,VPX4,VPX5,VPX7,VPX9,VS39,VS49,VSD4,VTH4,VWC,VWE,VX39,VXG VXG2

AIR CLEANER(3)

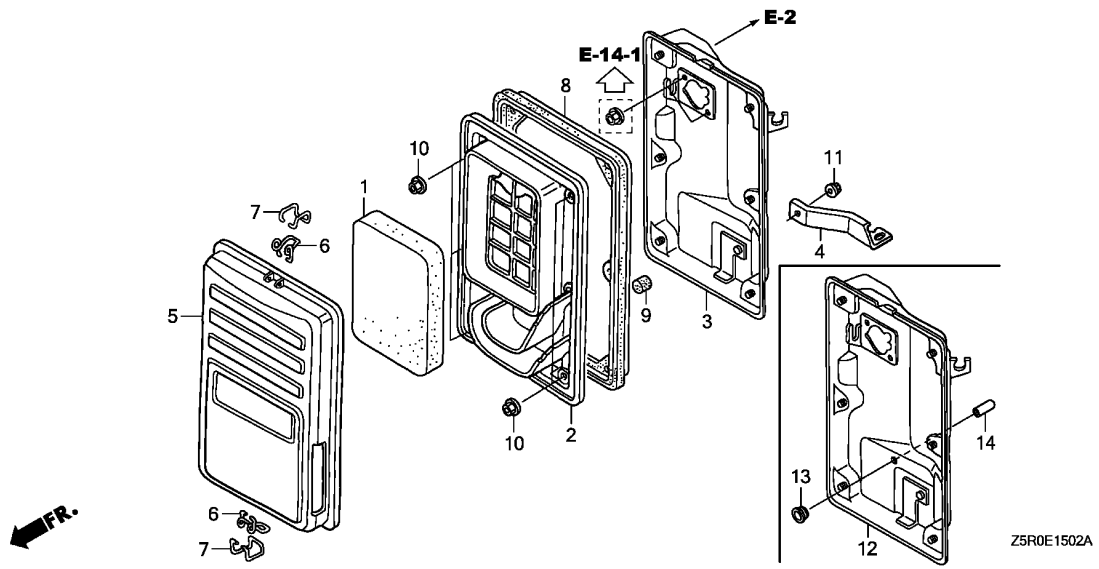

Ref. No.	Part No.	Description	Reqd. QTY GX 390 U1	GX 390 R1	GX 390 U2	GX 390 R2	Serial No.		Parts catalogue code
9	17367-413-690	FILTER, DRAIN TUBE	1	1	-	-	--------	--------	VC2,VC2N,VE39,VEP9,VKE4,VKE9,VKX4,VKX9,VMS2,VPE4,VPE5,VPE7 VPE9,VPX4,VPX5,VPX7,VPX9,VS39,VS49,VSD4,VTH4,VWC,VWE,VX39,VXG VXG2
10	94050-05000	NUT, FLANGE, 5MM	6	6	-	-	--------	--------	VC2,VC2N,VE39,VEP9,VKE4,VKE9,VKX4,VKX9,VMS2,VPE4,VPE5,VPE7 VPE9,VPX4,VPX5,VPX7,VPX9,VS39,VS49,VSD4,VTH4,VWC,VWE,VX39,VXG VXG2
11	94050-06000	NUT, FLANGE, 6MM	1	1	-	-	--------	--------	VC2,VC2N,VE39,VEP9,VKE4,VKE9,VKX4,VKX9,VMS2,VPE4,VPE5,VPE7 VPE9,VPX4,VPX5,VPX7,VPX9,VS39,VS49,VSD4,VTH4,VWC,VWE,VX39,VXG VXG2
12	17220-Z5R-000	CASE COMP., AIR CLEANER	1	-	-	-	--------	--------	VC2N
			1	-	-	-	1522960	--------	VC2,VE39,VEP9,VKE4,VKE9,VKX4,VKX9,VMS2,VPE4,VPE5,VPE7,VPE9 VPX4,VPX5,VPX7,VPX9,VS39,VS49,VSD4,VTH4,VWC,VWE,VX39,VXG,VXG2
			-	1	-	-	--------	--------	VC2,VEP9,VKE4,VKX4,VPE4,VPE5,VPE7,VPE9,VPX4,VPX5,VPX7,VPX9 VS39,VS49,VSD4,VTH4,VWC,VWE,VXG
13	17232-898-000	GROMMET, AIR CLEANER	1	-	-	-	--------	--------	VC2N
			1	-	-	-	1522960	--------	VC2,VE39,VEP9,VKE4,VKE9,VKX4,VKX9,VMS2,VPE4,VPE5,VPE7,VPE9 VPX4,VPX5,VPX7,VPX9,VS39,VS49,VSD4,VTH4,VWC,VWE,VX39,VXG,VXG2
			-	1	-	-	--------	--------	VC2,VEP9,VKE4,VKX4,VPE4,VPE5,VPE7,VPE9,VPX4,VPX5,VPX7,VPX9 VS39,VS49,VSD4,VTH4,VWC,VWE,VXG
14	90634-ZL8-H00	CAP, SEALING	1	-	-	-	--------	--------	VC2N
			1	-	-	-	1522960	--------	VC2,VE39,VEP9,VKE4,VKE9,VKX4,VKX9,VMS2,VPE4,VPE5,VPE7,VPE9 VPX4,VPX5,VPX7,VPX9,VS39,VS49,VSD4,VTH4,VWC,VWE,VX39,VXG,VXG2
			-	1	-	-	--------	--------	VC2,VEP9,VKE4,VKX4,VPE4,VPE5,VPE7,VPE9,VPX4,VPX5,VPX7,VPX9 VS39,VS49,VSD4,VTH4,VWC,VWE,VXG

AIR CLEANER(4)

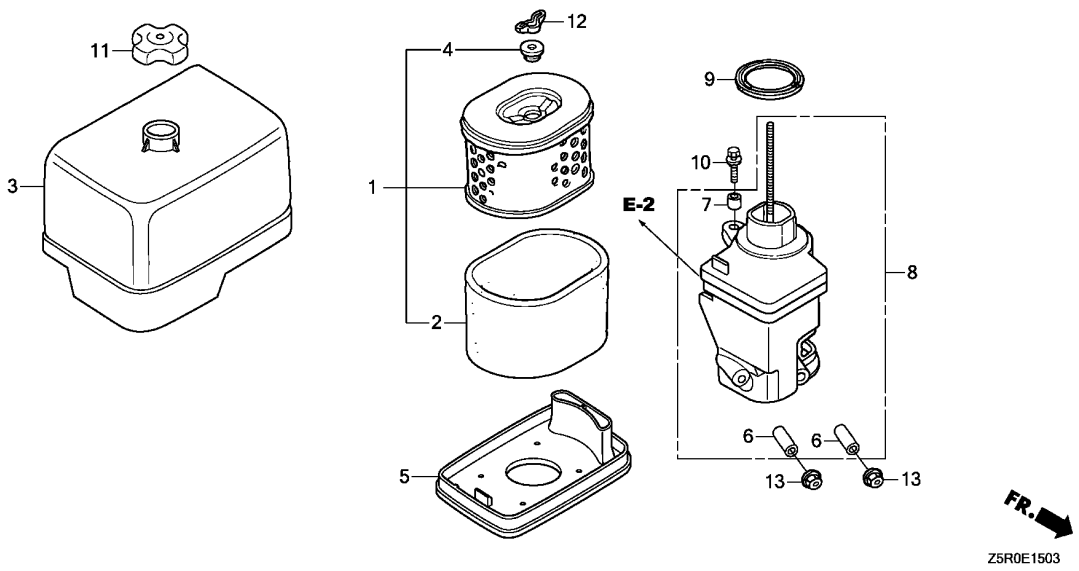

Ref. No.	L.O.N.	(Relative ref. Number) Description	F.R.T.

Ref. No.	Part No.	Description	Reqd. QTY GX 390 U1	GX 390 R1	GX 390 U2	GX 390 R2	Serial No.		Parts catalogue code
1	17210-ZE3-010	ELEMENT, AIR CLEANER ·····	-	-	1	1	--------	--------	PXE8,PXM8,PXU,PXU4,QXE8,QXU,SM32,SM34,SMX2,SXE4
2	17218-ZE3-000	FILTER, OUTER ·····	-	-	1	1	--------	--------	PXE8,PXM8,PXU,PXU4,QXE8,QXU,SM32,SM34,SMX2,SXE4
3	17231-Z5T-000	COVER, AIR CLEANER CASE ·····	-	-	1	1	--------	--------	PXE8,PXM8,PXU,PXU4,QXE8,QXU,SM32,SM34,SMX2,SXE4
4	17232-891-000	GROMMET, AIR CLEANER ·····	-	-	1	1	--------	--------	PXE8,PXM8,PXU,PXU4,QXE8,QXU,SM32,SM34,SMX2,SXE4
5	17235-Z5T-000	NOSE, SILENCER ·····	-	-	1	1	--------	--------	PXE8,PXM8,PXU,PXU4,QXE8,QXU,SM32,SM34,SMX2,SXE4
6	17238-ZE2-310	COLLAR, AIR CLEANER ·····	-	-	2	2	--------	--------	PXE8,PXM8,PXU,PXU4,QXE8,QXU,SM32,SM34,SMX2,SXE4
7	17239-ZE1-000	COLLAR B, AIR CLEANER ·····	-	-	1	1	--------	--------	PXE8,PXM8,PXU,PXU4,QXE8,QXU,SM32,SM34,SMX2,SXE4
8	17410-Z5T-000	ELBOW COMP., AIR CLEANER ····	-	-	1	1	--------	--------	PXE8,PXM8,PXU,PXU4,QXE8,QXU,SM32,SM34,SMX2,SXE4
9	17417-Z5T-000	PACKING, AIR CLEANER ELBOW ··	-	-	1	1	--------	--------	PXE8,PXM8,PXU,PXU4,QXE8,QXU,SM32,SM34,SMX2,SXE4
10	90009-ZE2-003	BOLT-WASHER, 6X22 ·····	-	-	1	1	--------	--------	PXE8,PXM8,PXU,PXU4,QXE8,QXU,SM32,SM34,SMX2,SXE4
11	90202-Z2E-000	NUT, AIR CLEANER COVER ·····	-	-	1	1	--------	--------	PXE8,PXM8,PXU,PXU4,QXE8,QXU,SM32,SM34,SMX2,SXE4
12	90325-044-000	NUT, TOOL BOX SETTING ·····	-	-	1	1	--------	--------	PXE8,PXM8,PXU,PXU4,QXE8,QXU,SM32,SM34,SMX2,SXE4
13	94050-06000	NUT, FLANGE, 6MM ·····	-	-	2	2	--------	--------	PXE8,PXM8,PXU,PXU4,QXE8,QXU,SM32,SM34,SMX2,SXE4

MUFFLER(1)

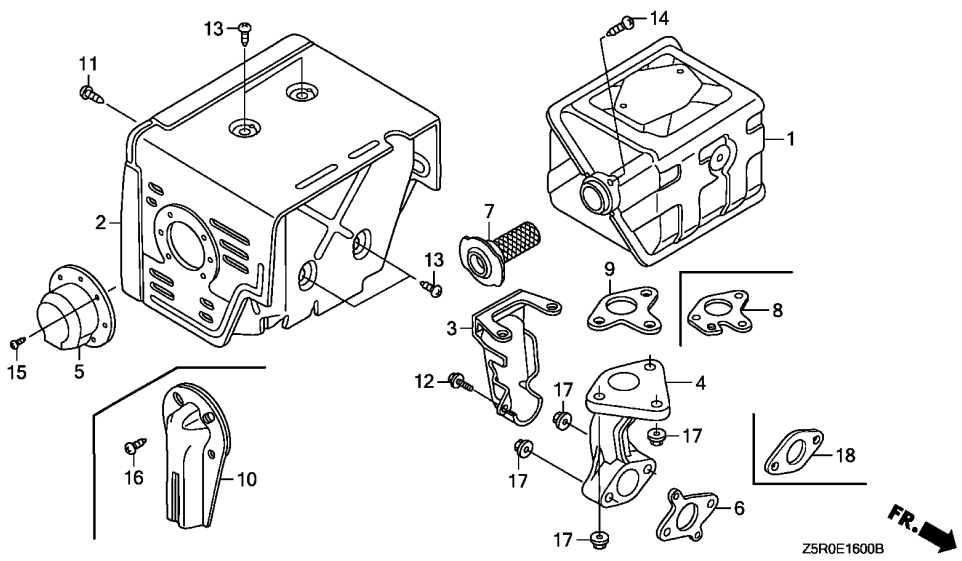

Ref. No.	L.O.N.	(Relative ref. Number) Description	F.R.T.

Ref. No.	Part No.	Description	Reqd. QTY GX 390 U1	GX 390 R1	GX 390 U2	GX 390 R2	Serial No.		Parts catalogue code
1	18310-ZE2-W61	MUFFLER COMP.(100DB)	1	1	-	-	--------	--------	HA2,HJA2,LKE,LX2,LXE2,LXE4,LXE8,LXQ4,LXU,PA2,PAE2,PXE8,PXM8 PXU,PXU4,QA2,QA26,QAA2,QAE2,QAE6,QAW,QC2,QDW9,QE,QHB4,QK4,QKA4 QKB2,QME0,QNB2,QND,QNE2,QNE6,QNE8,QNE9,QNK,QNR2,QNR6,QSC2,QTR2 QWA2,QWA4,QWC4,QWH2,QWT2,QXB,QXB7,QXC6,QXC9,QXE4,QXE6,QXE7 QXE8,QXEB,QXQ4,QXQ7,QXU,SCK4,SHQ4,SM32,SM34,SMC1,SME0,SME6 SMX2,SMX4,STC4,SWA4,SXB,SXB7,SXE4,SXE7,SXE8,SXEB,SXQ4,SXU,VA2 VAC2,VAG2,VCN2,VD2,VDB2,VDE2,VK2,VKB2,VM2,VMA2,VME2,VN17,VN27 VNG1,VNG2,VSD,VSD7,VWA2,VWC7,VX8,VXB,VXB7,VXE2,VXE4,VXE6,VXE7 VXE8,VXEB,VXQ4
	18310-ZK6-880	MUFFLER COMP.	1	1	-	-	--------	--------	QXB9,QXE9,QXH9,SXB9,SXE9,VNS9,VSD9,VWC9,VXB9,VXE9
2	18320-ZE2-W61	PROTECTOR COMP., MUFFLER	1	1	-	-	--------	--------	HA2,HJA2,LKE,LX2,LXE2,LXE4,LXE8,LXQ4,LXU,PA2,PAE2,PXE8,PXM8 PXU,QA2,QA26,QAA2,QAE2,QAE6,QAW,QC2,QDW9,QE,QHB4,QK4,QKA4,QKB2 QME0,QNB2,QND,QNE2,QNE6,QNE8,QNE9,QNK,QNR2,QNR6,QSC2,QTR2,QWA2 QWA4,QWC4,QWH2,QWT2,QXC6,QXC9,QXE4,QXE6,QXE8,QXQ4,QXQ7,QXU SHQ4,SM32,SMC1,SME0,SME6,SMX2,STC4,SWA4,SXE4,SXE8,SXQ4,SXU,VA2 VAC2,VAG2,VCN2,VD2,VDB2,VDE2,VK2,VKB2,VM2,VMA2,VME2,VWA2,VX8 VXE2,VXE4,VXE6,VXE8,VXQ4
	18320-ZF6-W01	PROTECTOR COMP., MUFFLER (100DB)	1	1	-	-	--------	--------	QXB,QXB7,QXB9,QXE7,QXE9,QXEB,QXH9,SCK4,SXB,SXB7,SXB9,SXE7,SXE9 SXEB,VN17,VN27,VNG1,VNG2,VNS9,VSD,VSD7,VSD9,VWC7,VWC9,VXB,VXB7 VXB9,VXE7,VXE9,VXEB
	18320-ZE2-W62	PROTECTOR COMP., MUFFLER	1	-	-	-	--------	--------	PXU4,SM34,SMX4
3	18323-ZE3-W40	PROTECTOR, EX. PIPE	1	1	-	-	--------	--------	HA2,HJA2,PAE2,QA2,QA26,QAA2,QAE2,QAE6,QAW,QKB2,QNB2,QND,QNE2 QNE6,QNE8,QNE9,QNK,QNR2,QNR6,QSC2,QTR2,QWA2,SMX2,SMX4,SWA4,VA2 VAC2,VAG2,VD2,VDB2,VDE2,VM2,VMA2,VME2

Ref. No.	Part No.	Description	Reqd. QTY GX 390 U1	GX 390 R1	GX 390 U2	GX 390 R2	Serial No.		Parts catalogue code
4	18330-ZE2-W00	PIPE, EX.	1	1	-	-	--------	--------	HA2,HJA2,LKE,LX2,LXE2,LXE4,LXE8,LXQ4,LXU,PA2,PAE2,PXE8,PXM8 PXU,PXU4,QA2,QA26,QAA2,QAE2,QAE6,QAW,QC2,QDW9,QE,QHB4,QK4,QKA4 QKB2,QME0,QNB2,QND,QNE2,QNE6,QNE8,QNE9,QNK,QNR2,QNR6,QSC2,QTR2 QWA2,QWA4,QWC4,QWH2,QWT2,QXB,QXB7,QXB9,QXC6,QXC9,QXE4,QXE6 QXE7,QXE8,QXE9,QXEB,QXH9,QXQ4,QXQ7,QXU,SCK4,SHQ4,SM32,SM34 SMC1,SME0,SME6,SMX2,SMX4,STC4,SWA4,SXB,SXB7,SXB9,SXE4,SXE7 SXE8,SXE9,SXEB,SXQ4,SXU,VA2,VAC2,VAG2,VCN2,VD2,VDB2,VDE2,VK2 VKB2,VM2,VMA2,VME2,VN17,VN27,VNG1,VNG2,VNS9,VSD,VSD7,VSD9,VWA2 VWC7,VWC9,VX8,VXB,VXB7,VXB9,VXE2,VXE4,VXE6,VXE7,VXE8,VXE9,VXEB VXQ4
5	18331-ZE3-811	CAP, MUFFLER	1	-	-	-	--------	--------	QHB4,SMX4
	18331-ZE3-810	.....	1	-	-	-	--------	1166160	HA2,HJA2,PAE2,QA2,QA26,QAE2,QAE6,QAW,QE,QK4,QKA4,QKB2,QNB2,QND QNE2,QNE6,QNE8,QNE9,QNK,QNR2,QNR6,QTR2,QWH2,QWT2,SMC1,SMX2,VA2 VD2,VDB2,VKB2,VM2,VMA2
	18331-ZE3-811	.....	1	-	-	-	1166161	--------	HA2,HJA2,PAE2,QA2,QA26,QAE2,QAE6,QAW,QE,QK4,QKA4,QKB2,QNB2,QND QNE2,QNE6,QNE8,QNE9,QNK,QNR2,QNR6,QTR2,QWH2,QWT2,SMC1,SMX2,VA2 VD2,VDB2,VKB2,VM2,VMA2
			-	1	-	-	--------	--------	QKB2,QNB2,VD2,VDB2,VK2,VKB2
6	18333-ZF6-W01	GASKET, EX. PIPE	1	1	-	-	--------	--------	HA2,HJA2,LKE,LX2,LXE2,LXE4,LXE8,LXQ4,LXU,PA2,PAE2,PXE8,PXM8 PXU,PXU4,QA2,QA26,QAA2,QAE2,QAE6,QAW,QC2,QDW9,QE,QHB4,QK4,QKA4 QKB2,QME0,QNB2,QND,QNE2,QNE6,QNE8,QNE9,QNK,QNR2,QNR6,QSC2,QTR2 QWA2,QWA4,QWC4,QWH2,QWT2,QXB,QXB7,QXB9,QXC6,QXC9,QXE4,QXE6 QXE7,QXE8,QXE9,QXEB,QXH9,QXQ4,QXQ7,QXU,SCK4,SHQ4,SM32,SM34 SMC1,SME0,SME6,SMX2,SMX4,STC4,SWA4,SXB,SXB7,SXB9,SXE4,SXE7 SXE8,SXE9,SXEB,SXQ4,SXU,VA2,VAC2,VAG2,VCN2,VD2,VDB2,VDE2,VK2 VKB2,VM2,VMA2,VME2,VN17,VN27,VNG1,VNG2,VNS9,VSD,VSD7,VSD9,VWA2 VWC7,VWC9,VX8,VXB,VXB7,VXB9,VXE2,VXE4,VXE6,VXE7,VXE8,VXE9,VXEB VXQ4
7	18355-ZE2-W00	ARRESTER, SPARK	(1)	(1)	-	-	--------	--------	ED6,EDD2,EDS2,EDS6,EDT6,EN6,ENT2,LKE,LX2,LXE2,LXE4,LXE8,LXQ4 LXU,PA2,PXE8,PXM8,PXU,PXU4,QAA2,QME0,QND,QNE2,QNE6,QNE8,QNE9 QNK,QNR2,QNR6,QSC2,QTR2,QWH2,QWT2,QXC4,QXC6,QXC9,QXE4,QXE6 QXE8,QXQ4,QXQ7,QXS4,QXU,SHQ4,SM32,SM34,SMD3,SME0,SME6,SNC,SXE4 SXE8,SXQ4,SXU,VAA1,VAA8,VC2,VC2N,VKE4,VKX4,VMS2,VS39,VSD4,VTH4 VWC,VWE,VWT4,VX8,VXE2,VXE4,VXE6,VXE8,VXG,VXG2,VXQ4
			1	1	-	-	--------	--------	HA2,HJA2,PAE2,QA2,QA26,QAE2,QAE6,QAW,QC2,QDW9,QE,QHB4,QK4,QKA4 QKB2,QNB2,QWA2,QWA4,QWC4,QXB,QXB7,QXB9,QXE7,QXE9,QXEB,QXH9 SCK4,SMC1,SMX2,SMX4,STC4,SWA4,SXB,SXB7,SXB9,SXE7,SXE9,SXEB,VA2 VAC2,VAG2,VCN2,VD2,VDB2,VDE2,VK2,VKB2,VM2,VMA2,VME2,VN17,VN27 VNG1,VNG2,VNS9,VSD,VSD7,VSD9,VWA2,VWC7,VWC9,VXB,VXB7,VXB9,VXE7 VXE9,VXEB
8	18381-ZE2-W10	GASKET, MUFFLER(ARRESTER) (NIPPON LEAKLESS)	(1)	(1)	-	-	--------	--------	ED6,EDD2,EDS2,EDS6,EDT6,EN6,ENT2,LKE,LX2,LXE2,LXE4,LXE8,LXQ4 LXU,PA2,PXE8,PXM8,PXU,PXU4,QAA2,QME0,QND,QNE2,QNE6,QNE8,QNE9 QNK,QNR2,QNR6,QSC2,QTR2,QWH2,QWT2,QXC4,QXC6,QXC9,QXE4,QXE6 QXE8,QXQ4,QXQ7,QXS4,QXU,SHQ4,SM32,SM34,SME0,SME6,SXE4,SXE8 SXQ4,SXU,VAA1,VAA8,VC2,VC2N,VEP7,VKE4,VKX4,VMS2,VPE5,VPX5,VS39 VSD4,VTH4,VWC,VWE,VWT4,VX8,VXE2,VXE4,VXE6,VXE8,VXG,VXG2,VXP7 VXQ4
	18381-Z8S-801	GASKET, MUFFLER(ARRESTER) (THAI LEAKLESS)	1	1	-	-	--------	--------	HA2,HJA2,PAE2,QA2,QA26,QAE2,QAE6,QAW,QC2,QDW9,QE,QHB4,QK4,QKA4 QKB2,QNB2,QWA2,QWA4,QWC4,QXB,QXB7,QXB9,QXE7,QXE9,QXEB,QXH9 SCK4,SMC1,SMD3,SMX2,SMX4,SNC,STC4,SWA4,SXB,SXB7,SXB9,SXE7,SXE9 SXEB,VA2,VAC2,VAG2,VCN2,VD2,VDB2,VDE2,VK2,VKB2,VM2,VMA2,VME2 VN17,VN27,VNG1,VNG2,VNS9,VSD,VSD7,VSD9,VWA2,VWC7,VWC9,VXB,VXB7 VXB9,VXE7,VXE9,VXEB

MUFFLER(1)

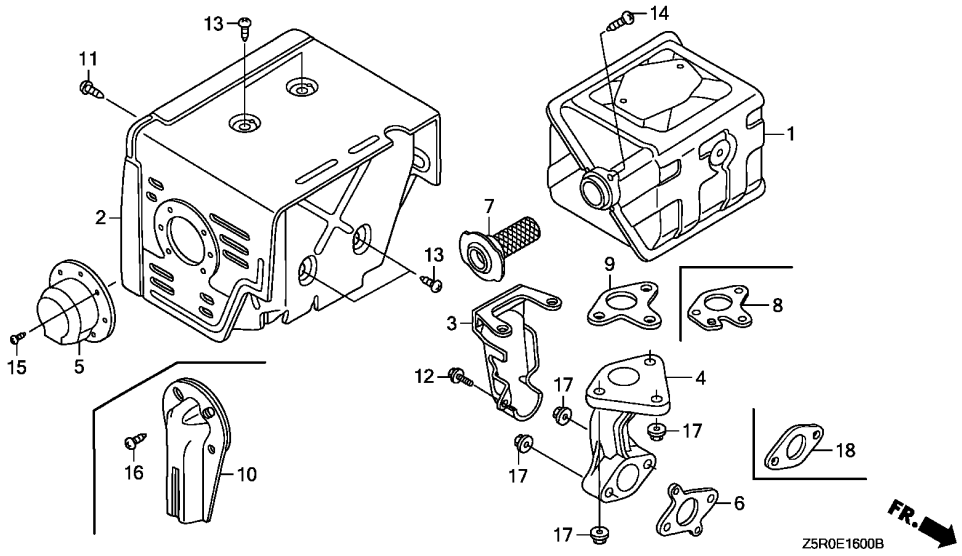

Ref. No.	Part No.	Description	Reqd. QTY GX 390 U1	GX 390 R1	GX 390 U2	GX 390 R2	Serial No.		Parts catalogue code
(8)	18381-ZE2-W10	GASKET, MUFFLER(ARRESTER) (NIPPON LEAKLESS)	1	1	-	-	--------	--------	HA2,HJA2,PAE2,QA2,QA26,QAE2,QAE6,QAW,QC2,QDW9,QE,QHB4,QK4,QKA4 QKB2,QNB2,QWA2,QWA4,QWC4,QXB,QXB7,QXB9,QXE7,QXE9,QXEB,QXH9 SCK4,SMC1,SMD3,SMX2,SMX4,SNC,STC4,SWA4,SXB,SXB7,SXB9,SXE7,SXE9 SXEB,VA2,VAC2,VAG2,VCN2,VD2,VDB2,VDE2,VK2,VKB2,VM2,VMA2,VME2 VN17,VN27,VNG1,VNG2,VNS9,VSD,VSD7,VSD9,VWA2,VWC7,VWC9,VXB,VXB7 VXB9,VXE7,VXE9,VXEB
			-	-	-	(1)	--------	--------	ED6,EDD2,EDS6,EDT6,EN6,ENT2
9	18381-ZE2-800	GASKET, MUFFLER (NIPPON LEAKLESS)	1	1	-	-	--------	--------	LKE,LX2,LXE2,LXE4,LXE8,LXQ4,LXU,PA2,PXE8,PXM8,PXU,PXU4,QAA2 QMEO,QND,QNE2,QNE6,QNE8,QNE9,QNK,QNR2,QNR6,QSC2,QTR2,QWH2,QWT2 QXC6,QXC9,QXE4,QXE6,QXE8,QXQ4,QXQ7,QXU,SHQ4,SM32,SM34,SMEO SME6,SXE4,SXE8,SXQ4,SXU,VX8,VXE2,VXE4,VXE6,VXE8,VXQ4
10	18430-ZF6-W50	DEFLECTOR COMP., MUFFLER ····	(1)	-	-	-	--------	--------	QE,QHB4,SMC1
11	90006-ZE2-000	SCREW, TAPPING, 6X10 ·····	1	1	-	-	--------	--------	HA2,HJA2,LKE,LX2,LXE2,LXE4,LXE8,LXQ4,LXU,PA2,PAE2,PXE8,PXM8 PXU,PXU4,QA2,QA26,QAA2,QAE2,QAE6,QAW,QC2,QDW9,QE,QHB4,QK4,QKA4 QKB2,QMEO,QNB2,QND,QNE2,QNE6,QNE8,QNE9,QNK,QNR2,QNR6,QSC2,QTR2 QWA2,QWA4,QWC4,QWH2,QWT2,QXB,QXB7,QXB9,QXC6,QXC9,QXE4,QXE6 QXE7,QXE8,QXE9,QXEB,QXH9,QXQ4,QXQ7,QXU,SCK4,SHQ4,SM32,SM34 SMC1,SMEO,SME6,SMX2,SMX4,STC4,SWA4,SXB,SXB7,SXB9,SXE4,SXE7 SXE8,SXE9,SXEB,SXQ4,SXU,VA2,VAC2,VAG2,VCN2,VD2,VDB2,VDE2,VK2 VKB2,VM2,VMA2,VME2,VN17,VN27,VNG1,VNG2,VNS9,VSD,VSD7,VSD9,VWA2 VWC7,VWC9,VX8,VXB,VXB7,VXB9,VXE2,VXE4,VXE6,VXE7,VXE8,VXE9,VXEB VXQ4
12	90013-883-000	BOLT, FLANGE, 6X12(CT200) ···	1	1	-	-	--------	--------	HA2,HJA2,PAE2,QA2,QA26,QAA2,QAE2,QAE6,QAW,QKB2,QNB2,QND,QNE2 QNE6,QNE8,QNE9,QNK,QNR2,QNR6,QSC2,QTR2,QWA2,SMX2,SMX4,SWA4,VA2 VAC2,VAG2,VD2,VDB2,VDE2,VM2,VMA2,VME2

MUFFLER(1)

Ref. No.	Part No.	Description	Reqd. QTY GX 390 U1	GX 390 R1	GX 390 U2	GX 390 R2	Serial No.		Parts catalogue code
13	90050-ZE1-000	SCREW, TAPPING, 5X8 ·····	4	4	-	-	--------	--------	HA2,HJA2,LKE,LX2,LXE2,LXE4,LXE8,LXQ4,LXU,PA2,PAE2,PXE8,PXM8 PXU,PXU4,QA2,QA26,QAA2,QAE2,QAE6,QAW,QC2,QDW9,QE,QHB4,QK4,QKA4 QKB2,QME0,QNB2,QND,QNE2,QNE6,QNE8,QNE9,QNK,QNR2,QNR6,QSC2,QTR2 QWA2,QWA4,QWC4,QWH2,QWT2,QXB,QXB7,QXB9,QXC6,QXC9,QXE4,QXE6 QXE7,QXE8,QXE9,QXEB,QXH9,QXQ4,QXQ7,QXU,SCK4,SHQ4,SM32,SM34 SMC1,SME0,SME6,SMX2,SMX4,STC4,SWA4,SXB,SXB7,SXB9,SXE4,SXE7 SXE8,SXE9,SXEB,SXQ4,SXU,VA2,VAC2,VAG2,VCN2,VD2,VDB2,VDE2,VK2 VKB2,VM2,VMA2,VME2,VN17,VN27,VNG1,VNG2,VNS9,VSD,VSD7,VSD9,VWA2 VWC7,VWC9,VX8,VXB,VXB7,VXB9,VXE2,VXE4,VXE6,VXE7,VXE8,VXE9,VXEB VXQ4
14	90050-ZE1-000	SCREW, TAPPING, 5X8 ·····	1	1	-	-	--------	--------	HA2,HJA2,PAE2,QA2,QA26,QAE2,QAE6,QAW,QC2,QDW9,QE,QHB4,QK4,QKA4 QKB2,QNB2,QWA2,QWA4,QWC4,QXB,QXB7,QXB9,QXE7,QXE9,QXEB,QXH9 SCK4,SMC1,SMX2,SMX4,STC4,SWA4,SXB,SXB7,SXB9,SXE7,SXE9,SXEB,VA2 VAC2,VAG2,VCN2,VD2,VDB2,VDE2,VK2,VKB2,VM2,VMA2,VME2,VN17,VN27 VNG1,VNG2,VNS9,VSD,VSD7,VSD9,VWA2,VWC7,VWC9,VXB,VXB7,VXB9,VXE7 VXE9,VXEB
			(1)	(1)	-	-	--------	--------	VS39
	90055-ZE1-000	SCREW, TAPPING, 4X6 ·····	(1)	-	-	-	--------	--------	ED6,EDD2,EDS2,EDS6,EDT6,EN6,ENT2,LKE,LX2,LXE2,LXE4,LXE8,LXQ4 LXU,PA2,PXE8,PXU,PXU4,QAA2,QE,QHB4,QME0,QND,QNE2,QNE6,QNE8 QNE9,QNK,QNR2,QNR6,QSC2,QTR2,QWH2,QWT2,QXC4,QXC6,QXC9,QXE4 QXE6,QXE8,QXQ4,QXQ7,QXS4,QXU,SHQ4,SM32,SM34,SMD3,SME0,SME6 SMX4,SNC,SXE4,SXE8,SXQ4,SXU,VAA1,VAA8,VC2,VC2N,VKE4,VKX4,VMS2 VSD4,VTH4,VWC,VWE,VWT4,VX8,VXE2,VXE4,VXE6,VXE8,VXG,VXG2,VXQ4
			-	(1)	-	-	--------	--------	ED6,EDD2,EDS2,EDS6,EDT6,EN6,ENT2,PXM8,VAA1,VAA8,VC2,VDE2,VK2 VKB2,VKE4,VKX4,VSD4,VTH4,VWC,VWE,VWT4,VXG
			-	-	-	(1)	--------	--------	ED6,EDD2,EDS6,EDT6,EN6,ENT2
15	90055-ZE1-000	SCREW, TAPPING, 4X6 ·····	3	3	-	-	--------	--------	HA2,HJA2,PAE2,QA2,QA26,QAE2,QAE6,QAW,QE,QHB4,QK4,QKA4,QKB2 QNB2,QND,QNE2,QNE6,QNE8,QNE9,QNK,QNR2,QNR6,QTR2,QWH2,QWT2,SMC1 SMX2,SMX4,VA2,VD2,VDB2,VKB2,VM2,VMA2
16	90050-ZE1-000	SCREW, TAPPING, 5X8 ·····	(2)	-	-	-	--------	--------	QE,QHB4
	90055-ZE1-000	SCREW, TAPPING, 4X6 ·····	(2)	-	-	-	--------	--------	SMC1
17	94050-08000	NUT, FLANGE, 8MM ·····	5	5	-	-	--------	--------	HA2,HJA2,LKE,LX2,LXE2,LXE4,LXE8,LXQ4,LXU,PA2,PAE2,PXE8,PXM8 PXU,PXU4,QA2,QA26,QAA2,QAE2,QAE6,QAW,QC2,QDW9,QE,QHB4,QK4,QKA4 QKB2,QME0,QNB2,QND,QNE2,QNE6,QNE8,QNE9,QNK,QNR2,QNR6,QSC2,QTR2 QWA2,QWA4,QWC4,QWH2,QWT2,QXB,QXB7,QXB9,QXC6,QXC9,QXE4,QXE6 QXE7,QXE8,QXE9,QXEB,QXH9,QXQ4,QXQ7,QXU,SCK4,SHQ4,SM32,SM34 SMC1,SME0,SME6,SMX2,SMX4,STC4,SWA4,SXB,SXB7,SXB9,SXE4,SXE7 SXE8,SXE9,SXEB,SXQ4,SXU,VA2,VAC2,VAG2,VCN2,VD2,VDB2,VDE2,VK2 VKB2,VM2,VMA2,VME2,VN17,VN27,VNG1,VNG2,VNS9,VSD,VSD7,VSD9,VWA2 VWC7,VWC9,VX8,VXB,VXB7,VXB9,VXE2,VXE4,VXE6,VXE7,VXE8,VXE9,VXEB VXQ4
18	18333-ZK6-Y00	GASKET, EX. PIPE ·····	-	(1)	-	-	--------	--------	VDE2

MUFFLER(2)

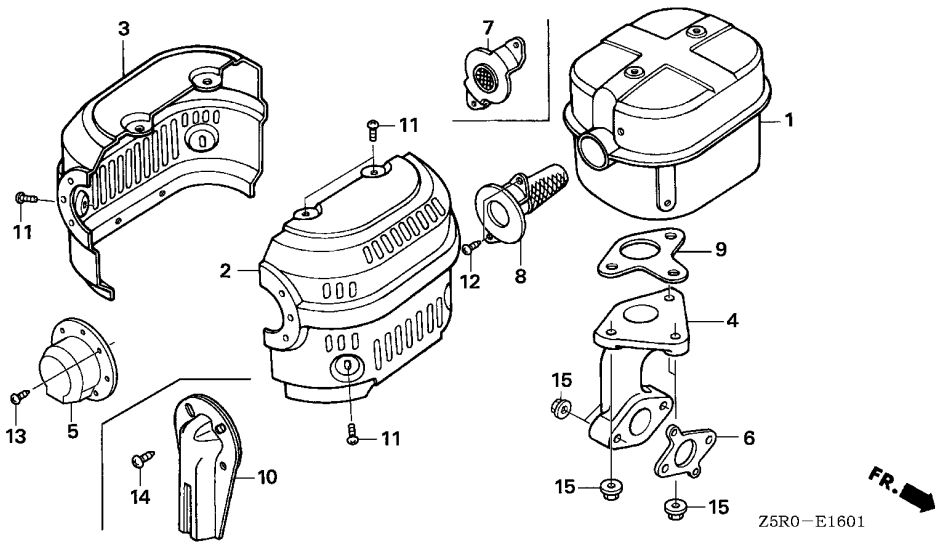

Ref. No.	L.O.N.	(Relative ref. Number) Description	F.R.T.

Ref. No.	Part No.	Description	Reqd. QTY GX 390 U1	GX 390 R1	GX 390 U2	GX 390 R2	Serial No.		Parts catalogue code
1	18310-ZE3-003	MUFFLER COMP.	1	-	-	-	--------	--------	QXC4,QXS4,SMD3,SNC
2	18320-ZE3-H00	PROTECTOR, R. MUFFLER	1	-	-	-	--------	--------	QXC4,QXS4,SMD3,SNC
3	18325-ZE3-H00	PROTECTOR, L. MUFFLER	1	-	-	-	--------	--------	QXC4,QXS4,SMD3,SNC
4	18330-ZE2-000	PIPE, EX.	1	-	-	-	--------	--------	QXC4,QXS4,SMD3,SNC
5	18331-ZE3-810	CAP, MUFFLER	1	-	-	-	--------	1166160	SMD3,SNC
	18331-ZE3-811		1	-	-	-	1166161	--------	SMD3,SNC
6	18333-ZF6-W01	GASKET, EX. PIPE	1	-	-	-	--------	--------	QXC4,QXS4,SMD3,SNC
7	18336-ZE3-000	FLANGE COMP., BAFFLE	1	-	-	-	--------	--------	QXC4,QXS4
8	18355-ZE3-010	ARRESTER, SPARK	1	-	-	-	--------	--------	SMD3,SNC
9	18381-ZE2-800	GASKET, MUFFLER (NIPPON LEAKLESS)	1	-	-	-	--------	--------	QXC4,QXS4
10	18430-ZF6-W50	DEFLECTOR COMP., MUFFLER	(1)	-	-	-	--------	--------	SMD3,SNC
11	90050-ZE3-H00	SCREW, TAPPING, 5X8	6	-	-	-	--------	--------	QXC4,QXS4
	90050-ZE1-000		6	-	-	-	--------	--------	SMD3,SNC
12	90050-ZE1-000	SCREW, TAPPING, 5X8	2	-	-	-	--------	--------	QXC4,QXS4,SMD3,SNC
13	90055-ZE1-000	SCREW, TAPPING, 4X6	3	-	-	-	--------	--------	SMD3,SNC
14	90055-ZE1-000	SCREW, TAPPING, 4X6	(2)	-	-	-	--------	--------	SMD3
	90050-ZE1-000	SCREW, TAPPING, 5X8	(2)	-	-	-	--------	--------	SNC
15	94050-08000	NUT, FLANGE, 8MM	5	-	-	-	--------	--------	QXC4,QXS4,SMD3,SNC

MUFFLER(3)

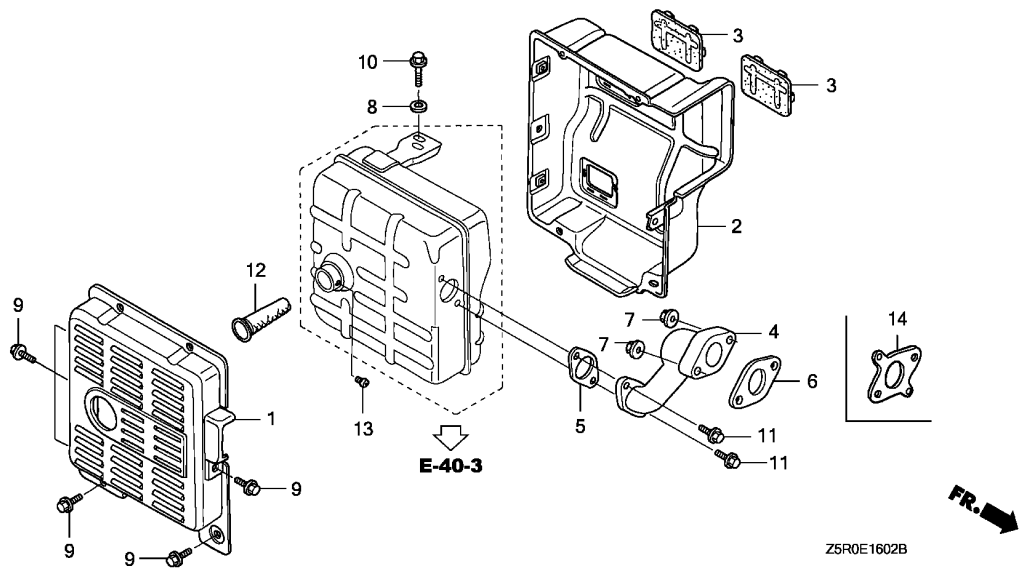

Ref. No.	L.O.N.	(Relative ref. Number) Description	F.R.T.

Ref. No.	Part No.	Description	Reqd. QTY GX 390 U1	GX 390 R1	GX 390 U2	GX 390 R2	Serial No.		Parts catalogue code
1	18320-ZC2-000	PROTECTOR, MUFFLER OUTER ····	1	1	-	-	--------	--------	VAA1,VAA8
2	18325-ZB4-000	PROTECTOR, MUFFLER INNER ····	1	1	-	-	--------	--------	VAA1,VAA8
3	18329-ZB4-000	SEAL, MUFFLER PROTECTOR ·····	2	2	-	-	--------	--------	VAA1,VAA8
4	18330-ZE3-700	PIPE, EX. ·····	1	1	-	1	--------	--------	ED6,EDD2,EN6,ENT2,VAA1,VAA8,VE39,VKE4,VKE9,VKX4,VKX9,VS49,VSD4 VTH4,VX39
	18330-ZE3-710	·····	1	1	-	1	--------	--------	EDS2,EDS6,EDT6
5	18333-ZB4-800	GASKET, EX. PIPE ·····	1	1	-	-	--------	--------	VAA1,VAA8
6	18333-ZE3-800	GASKET, EX. PIPE ·····	1	-	-	-	--------	1263163	ED6,EDD2,EDS2,EDS6,EDT6,EN6,ENT2,VAA1,VAA8,VE39,VKE4,VKE9,VKX4 VKX9,VS49,VSD4,VTH4,VX39
7	94050-08000	NUT, FLANGE, 8MM ·····	2	2	-	2	--------	--------	ED6,EDD2,EDS2,EDS6,EDT6,EN6,ENT2,VAA1,VAA8,VE39,VKE9,VKX9,VPE5 VPE9,VPX5,VPX9,VS49,VSD4,VTH4,VX39
8	94103-08000	WASHER, PLAIN, 8MM ·····	1	1	-	-	--------	--------	VAA1,VAA8
9	95701-06010-00	BOLT, FLANGE, 6X10 ·····	8	8	-	-	--------	--------	VAA1,VAA8
10	95701-08016-08	BOLT, FLANGE, 8X16 ·····	2	2	-	-	--------	--------	VAA1,VAA8
11	95701-08020-00	BOLT, FLANGE, 8X20 ·····	2	2	-	-	--------	--------	VAA1,VAA8,VPE9,VPX9,VS39,VWS
12	18355-ZB4-630	ARRESTER, SPARK ·····	(1)	-	-	-	--------	--------	VE39,VKE9,VKX9,VX39
			-	-	-	(1)	--------	--------	EDS6,EDT6
13	90002-ZE2-U91	SCREW, TAPPING, 4X8 ·····	(1)	-	-	-	--------	--------	VE39,VKE9,VKX9,VX39
14	18333-ZF6-W01	GASKET, EX. PIPE ·····	1	-	-	-	1263164	--------	ED6,EDD2,EDS2,EDS6,EDT6,EN6,ENT2,VAA1,VAA8,VE39,VKE4,VKE9,VKX4 VKX9,VS49,VSD4,VTH4,VX39
			-	1	-	1	--------	--------	ED6,EDD2,EDS2,EDS6,EDT6,EN6,ENT2,VAA1,VAA8,VKE4,VKX4,VS49,VSD4 VTH4

MUFFLER(4)

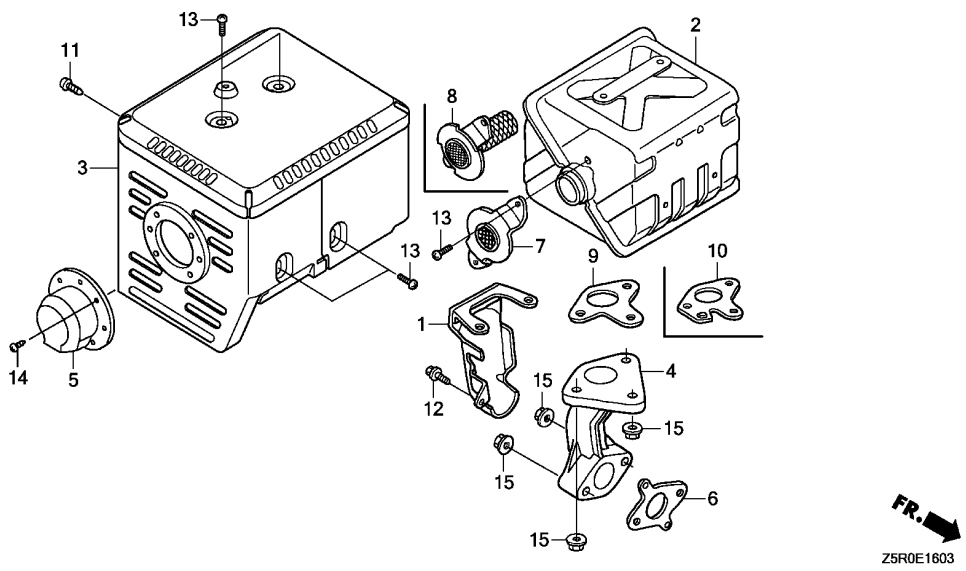

Ref. No.	L.O.N.	(Relative ref. Number) Description	F.R.T.

Ref. No.	Part No.	Description	Reqd. QTY GX 390 U1	GX 390 R1	GX 390 U2	GX 390 R2	Serial No.		Parts catalogue code
1	18205-Z5T-000	PROTECTOR COMP., EX. PIPE ···	-	-	1	-	--------	--------	SMX2
2	18310-Z5T-000	MUFFLER COMP. ·····	-	-	1	1	--------	--------	PXE8,PXM8,PXU,PXU4,QXE8,QXU,SM32,SM34,SMX2,SXE4
3	18320-Z5T-000	PROTECTOR COMP., MUFFLER ····	-	-	1	1	--------	--------	PXE8,PXM8,PXU,PXU4,QXE8,QXU,SM32,SM34,SMX2,SXE4
4	18331-Z5T-000	PIPE, EX. ·····	-	-	1	1	--------	--------	PXE8,PXM8,PXU,PXU4,QXE8,QXU,SM32,SM34,SMX2,SXE4
5	18331-ZE3-811	CAP, MUFFLER ·····	-	-	1	-	--------	--------	SMX2
6	18333-ZF6-W01	GASKET, EX. PIPE ·····	-	-	1	1	--------	--------	PXE8,PXM8,PXU,PXU4,QXE8,QXU,SM32,SM34,SMX2,SXE4
7	18336-ZE3-000	FLANGE COMP., BAFFLE ·····	-	-	1	1	--------	--------	PXE8,PXM8,PXU,PXU4,QXE8,QXU,SM32,SM34,SXE4
8	18350-Z5T-800	ARRESTER COMP., SPARK ·····	-	-	(1)	(1)	--------	--------	ED6,EDD2,EN6,ENT2,PXE8,PXM8,PXU,PXU4,QXE8,QXU,SM32,SM34,SMX2 SXE4
			-	-	1	-	--------	--------	SMX2
9	18381-ZE2-801	GASKET, MUFFLER (NIPPON LEAKLESS)	-	-	1	1	--------	--------	PXE8,PXM8,PXU,PXU4,QXE8,QXU,SM32,SM34,SXE4
10	18381-ZE2-W10	GASKET, MUFFLER(ARRESTER) (NIPPON LEAKLESS)	-	-	(1)	(1)	--------	--------	PXE8,PXM8,PXU,PXU4,QXE8,QXU,SM32,SM34,SXE4
			-	-	1	-	--------	--------	SMX2
11	90006-ZE2-000	SCREW, TAPPING, 6X10 ·····	-	-	1	1	--------	--------	PXE8,PXM8,PXU,PXU4,QXE8,QXU,SM32,SM34,SMX2,SXE4
12	90013-883-000	BOLT, FLANGE, 6X12(CT200) ···	-	-	1	-	--------	--------	SMX2
13	90050-ZE1-000	SCREW, TAPPING, 5X8 ·····	-	-	6	6	--------	--------	PXE8,PXM8,PXU,PXU4,QXE8,QXU,SM32,SM34,SMX2,SXE4
14	90055-ZE1-000	SCREW, TAPPING, 4X6 ·····	-	-	3	-	--------	--------	SMX2
15	94050-08000	NUT, FLANGE, 8MM ·····	-	-	5	5	--------	--------	PXE8,PXM8,PXU,PXU4,QXE8,QXU,SM32,SM34,SMX2,SXE4

FUEL TANK(1)

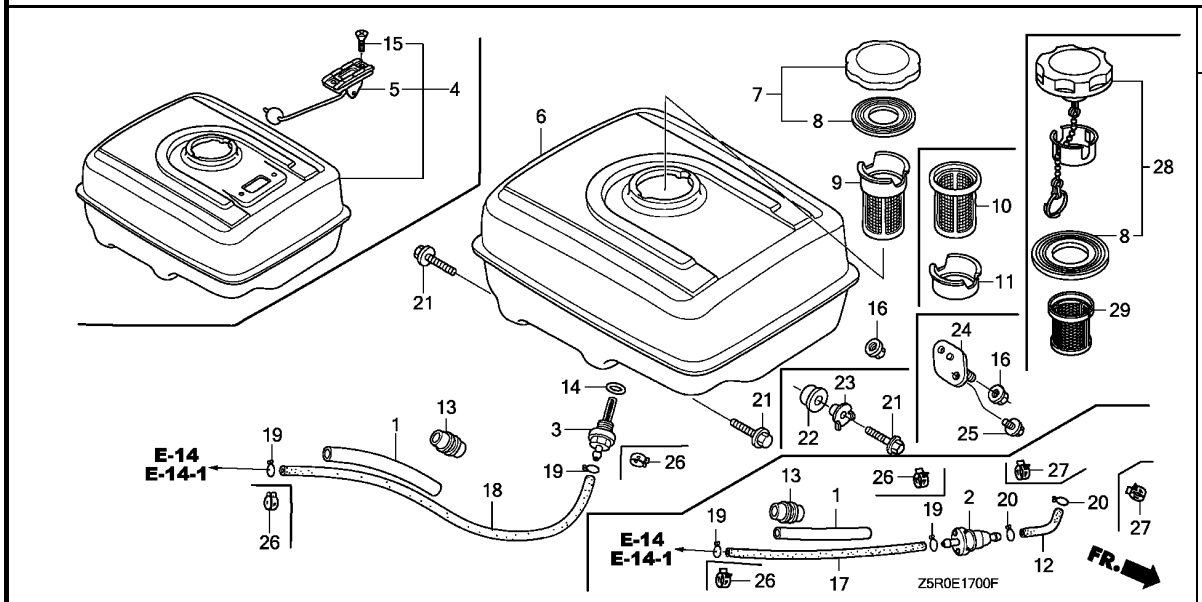

Ref. No.	L.O.N.	(Relative ref. Number) Description	F.R.T.

Ref. No.	Part No.	Description	Reqd. QTY GX 390 U1	GX 390 R1	GX 390 U2	GX 390 R2	Serial No.		Parts catalogue code
1	16854-ZH8-000	RUBBER, SUPPORTER(107MM) ····	1	1	1	-	--------	--------	HA2,HJA2,LKE,LX2,LXE2,LXE4,LXE8,LXQ4,LXU,PA2,PAE2,PXE8,PXU PXU4,QA2,QA26,QAA2,QAE2,QAE6,QAW,QC2,QDW9,QE,QHB4,QK4,QKA4 QKB2,QME0,QNB2,QND,QNE2,QNE6,QNE8,QNE9,QNK,QNR2,QNR6,QSC2,QTR2 QWA2,QWA4,QWC4,QWH2,QWT2,QXB,QXB7,QXB9,QXC4,QXC6,QXC9,QXE4 QXE6,QXE7,QXE8,QXE9,QXEB,QXH9,QXQ4,QXQ7,QXS4,QXU,SCK4,SHQ4 SM32,SM34,SMC1,SMD3,SME0,SME6,SMX2,SMX4,SNC,STC4,SWA4,SXB,SXB7 SXB9,SXE4,SXE7,SXE8,SXE9,SXEB,SXQ4,SXU,VA2,VAC2,VAG2,VC2,VC2N VCN2,VD2,VDB2,VDE2,VEP7,VKB2,VM2,VMA2,VME2,VMS2,VN17,VN27,VNG1 VNG2,VNS9,VS49,VSD,VSD4,VSD7,VSD9,VTH4,VWC,VWE,VX8,VXB,VXB7 VXB9,VXE2,VXE4,VXE6,VXE7,VXE8,VXE9,VXEB,VXG,VXP7,VXQ4
2	16910-GB2-005	STRAINER COMP., FUEL ·····	1	1	-	-	--------	--------	VE39,VKE4,VKE9,VKX4,VKX9,VPE4,VPE5,VPE7,VPE9,VPX4,VPX5,VPX7 VPX9,VS39,VX39
	16910-ZE8-015	·····	1	1	-	-	--------	--------	VS49,VSD4
3	16955-ZE1-000	JOINT, FUEL TANK ·····	1	-	-	-	--------	--------	HA2,HJA2,LKE,LX2,LXE2,LXE4,LXE8,LXQ4,LXU,PA2,PAE2,PXE8,PXU PXU4,QA2,QA26,QAA2,QAE2,QAE6,QAW,QC2,QDW9,QE,QHB4,QK4,QKA4 QME0,QND,QNE2,QNE6,QNE8,QNE9,QNK,QNR2,QNR6,QSC2,QWA4,QWC4,QWH2 QWT2,QXB,QXB7,QXB9,QXC4,QXC6,QXC9,QXE4,QXE6,QXE7,QXE8,QXE9 QXEB,QXH9,QXQ4,QXQ7,QXS4,QXU,SCK4,SHQ4,SM32,SM34,SMC1,SMD3 SME0,SME6,SMX2,SMX4,SNC,STC4,SWA4,SXB,SXB7,SXB9,SXE4,SXE7,SXE8 SXE9,SXEB,SXQ4,SXU,VA2,VEP7,VM2,VMA2,VME2,VSD,VSD7,VSD9,VX8 VXB,VXB7,VXB9,VXE2,VXE4,VXE6,VXE7,VXE8,VXE9,VXEB,VXP7,VXQ4
			1	-	-	-	1412957	--------	VN27
	16955-ZE1-010	·····	-	-	1	-			
4	17500-ZE3-812ZA	TANK ASSY., FUEL(GAUGE) *NH31*.....MCKINLEY WHITE	1	-	-	-	--------	1039912	STC4
	17500-ZE3-812ZE	*NH105*...MAT BLACK (#15-#20)	1	-	-	-	--------	1039912	VM2,VME2
	17500-ZE3-813ZA	*NH31*.....MCKINLEY WHITE	1	-	-	-	1039913	--------	STC4
	17500-ZE3-813ZE	*NH105*...MAT BLACK (#15-#20)	1	-	-	-	1039913	--------	VM2,VME2
5	17505-ZE2-013	GAUGE ASSY., FUEL ·····	1	-	-	-	--------	--------	STC4,VM2,VME2

FUEL TANK(1)

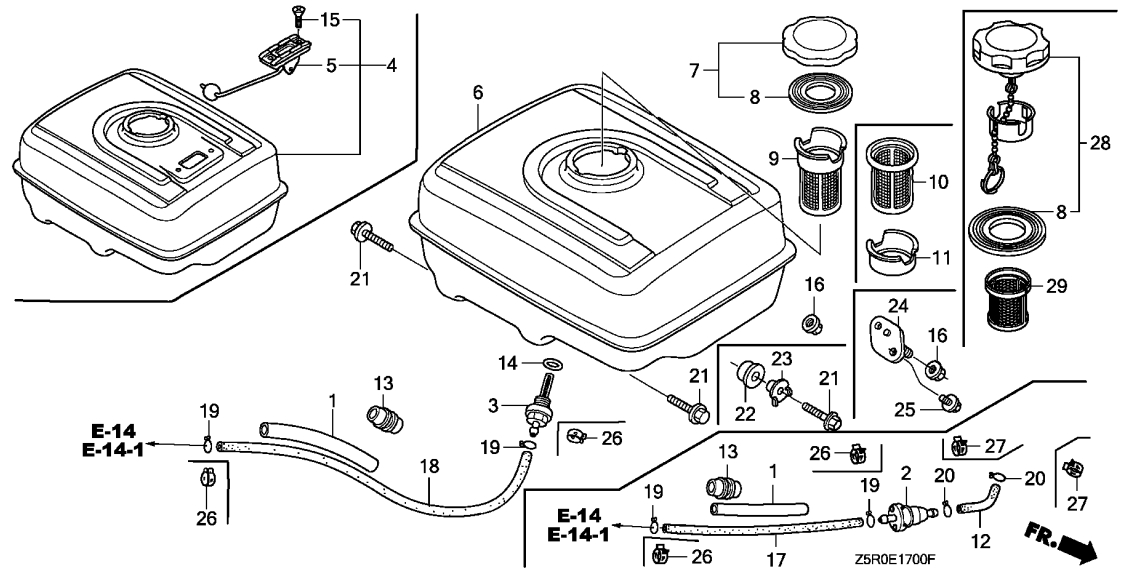

Ref. No.	Part No.	Description	Reqd. QTY GX 390 U1	GX 390 R1	GX 390 U2	GX 390 R2	Serial No.		Parts catalogue code
6	17510-ZE3-801ZA	TANK COMP., FUEL							
		NH1.....BLACK	1	-	-	-	--------	--------	PXE8,SM34
	17510-ZE3-801ZC	*NH31*.....MCKINLEY WHITE	1	-	-	-	--------	--------	PXU4,QHB4,QXH9,SM34,SMX4,VN27
	17510-ZE3-020ZA	*NH31*.....MCKINLEY WHITE	1	-	-	-	--------	1213085	HA2,HJA2,LKE,LX2,LXE2,LXE4,LXE8,LXQ4,LXU,PA2,PAE2,PXE8,PXU,QA2 QA26,QAA2,QAE2,QAE6,QAW,QDW9,QE,QK4,QKA4,QME0,QND,QNE2,QNE6 QNE8,QNE9,QNK,QNR2,QNR6,QSC2,QWA4,QXB,QXB7,QXC4,QXC6,QXC9,QXE4 QXE6,QXE7,QXE8,QXEB,QXQ4,QXQ7,QXS4,QXU,SCK4,SHQ4,SM32,SMC1 SMD3,SME0,SME6,SNC,SWA4,SXB,SXB7,SXE4,SXE7,SXE8,SXEB,SXQ4,SXU VA2,VEP7,VMA2,VSD,VSD7,VX8,VXB,VXB7,VXE2,VXE4,VXE6,VXE7,VXE8 VXEB,VXP7,VXQ4
	17510-ZE3-020ZB	*NH1*.....BLACK	1	-	-	-	--------	1213085	PXU,QA2,QAA2,QAE2,QC2,QDW9,QND,QNE9,QNR2,QWA4,QWC4,QWH2,QWT2 QXC9,QXQ4,QXS4,SM32,SME6,SMX2,SWA4,SXU,VSD,VSD7,VXB7,VXEB
	17510-ZE3-020ZD	*T34*.....SIMPSON BLUE	1	-	-	-	--------	1213085	QA2
	17510-ZE3-020ZE	*NH105*...MAT BLACK (#15-#20)	1	-	-	-	--------	1213085	VXE2,VXE7
	17510-ZE3-800ZA	*NH1*.....BLACK	1	-	-	-	--------	1383799	PA2
	17510-ZE3-800ZC	*NH31*.....MCKINLEY WHITE	1	-	-	-	--------	1383799	QXB9,QXE9,SXB9,SXE9
	17510-ZK6-880ZC	*NH1*.....BLACK	1	-	-	-	--------	1391385	VSD9,VXB9
	17510-ZK6-880ZB	*NH31*.....MCKINLEY WHITE	1	-	-	-	--------	1391385	VSD9,VXB9,VXE9
	17510-ZK6-880ZA	*NH105*...MAT BLACK (#15-#20)	1	-	-	-	--------	1391385	VXE9
	17510-ZE3-800ZC	*NH31*.....MCKINLEY WHITE	1	-	-	-	1213086	1383799	HA2,HJA2,LKE,LX2,LXE2,LXE4,LXE8,LXQ4,LXU,PA2,PAE2,PXE8,PXU,QA2 QA26,QAA2,QAE2,QAE6,QAW,QDW9,QE,QK4,QKA4,QME0,QND,QNE2,QNE6 QNE8,QNE9,QNK,QNR2,QNR6,QSC2,QWA4,QXB,QXB7,QXC4,QXC6,QXC9,QXE4 QXE6,QXE7,QXE8,QXEB,QXQ4,QXQ7,QXS4,QXU,SCK4,SHQ4,SM32,SMC1 SMD3,SME0,SME6,SNC,SWA4,SXB,SXB7,SXE4,SXE7,SXE8,SXEB,SXQ4,SXU VA2,VEP7,VMA2,VSD,VSD7,VX8,VXB,VXB7,VXE2,VXE4,VXE6,VXE7,VXE8 VXEB,VXP7,VXQ4
	17510-ZE3-800ZA	*NH1*.....BLACK	1	-	-	-	1213086	1383799	PXU,QA2,QAA2,QAE2,QC2,QDW9,QND,QNE9,QNR2,QWA4,QWC4,QWH2,QWT2 QXC9,QXQ4,QXS4,SM32,SME6,SMX2,SWA4,SXU,VSD,VSD7,VXB7,VXEB
	17510-ZE3-800ZE	*T34*.....SIMPSON BLUE	1	-	-	-	1213086	1383799	QA2

FUEL TANK(1)

Ref. No.	Part No.	Description	Reqd. QTY GX 390 U1	GX 390 R1	GX 390 U2	GX 390 R2	Serial No.		Parts catalogue code
(6)	17510-ZE3-800ZB	TANK COMP., FUEL *NH105*...MAT BLACK (#15-#20)	1	-	-	-	1213086	1383799	VXE2,VXE7
	17510-ZE3-801ZC	*NH31*.....MCKINLEY WHITE	1	-	-	-	1383800	--------	HA2,HJA2,LKE,LX2,LXE2,LXE4,LXE8,LXQ4,LXU,PA2,PAE2,PXE8,PXU,QA2 QA26,QAA2,QAE2,QAE6,QAW,QDW9,QE,QK4,QKA4,QMEO,QND,QNE2,QNE6 QNE8,QNE9,QNK,QNR2,QNR6,QSC2,QWA4,QXB,QXB7,QXB9,QXC4,QXC6,QXC9 QXE4,QXE6,QXE7,QXE8,QXE9,QXEB,QXQ4,QXQ7,QXS4,QXU,SCK4,SHQ4 SM32,SMC1,SMD3,SMEO,SME6,SNC,SWA4,SXB,SXB7,SXB9,SXE4,SXE7,SXE8 SXE9,SXEB,SXQ4,SXU,VA2,VEP7,VMA2,VSD,VSD7,VX8,VXB,VXB7,VXE2 VXE4,VXE6,VXE7,VXE8,VXEB,VXP7,VXQ4
	17510-ZE3-801ZA	*NH1*.....BLACK	1	-	-	-	1383800	--------	PA2,PXU,QA2,QAA2,QAE2,QC2,QDW9,QND,QNE9,QNR2,QWA4,QWC4,QWH2 QWT2,QXC9,QXQ4,QXS4,SM32,SME6,SMX2,SWA4,SXU,VSD,VSD7,VXB7,VXEB
	17510-ZE3-801ZE	*T34*.....SIMPSON BLUE	1	-	-	-	1383800	--------	QA2
	17510-ZE3-801ZB	*NH105*...MAT BLACK (#15-#20)	1	-	-	-	1383800	--------	VXE2,VXE7
	17510-ZK6-881ZC	*NH1*.....BLACK	1	-	-	-	1391386	--------	VSD9,VXB9
	17510-ZK6-881ZB	*NH31*.....MCKINLEY WHITE	1	-	-	-	1391386	--------	VSD9,VXB9,VXE9
	17510-ZK6-881ZA	*NH105*...MAT BLACK (#15-#20)	1	-	-	-	1391386	--------	VXE9
	17510-ZE3-801ZA	*NH1*.....BLACK	1	-	-	-	1412957	--------	VN27
	17510-Z5T-000ZB	*NH31*.....MCKINLEY WHITE	-	-	1	-	--------	--------	PXE8,PXU,PXU4,QXE8,QXU,SM32,SM34,SXE4
	17510-Z5T-000ZA	*NH1*.....BLACK	-	-	1	-	--------	--------	PXE8,PXU,SM32,SM34,SMX2
7	17620-ZOT-305	CAP COMP., FUEL FILLER (CHROME PLATED)	1	-	-	-	--------	1530148	HA2,HJA2,LKE,LX2,LXE2,LXE4,LXE8,LXQ4,LXU,PA2,PAE2,PXE8,PXU,QA2 QA26,QAA2,QAE2,QAE6,QAW,QC2,QDW9,QE,QK4,QKA4,QMEO,QND,QNE2 QNE6,QNE8,QNE9,QNK,QNR2,QNR6,QSC2,QWA4,QWC4,QWH2,QWT2,QXB,QXB7 QXB9,QXC4,QXC6,QXC9,QXE4,QXE6,QXE7,QXE8,QXE9,QXEB,QXH9,QXQ4 QXQ7,QXS4,QXU,SCK4,SHQ4,SM32,SMC1,SMD3,SMEO,SME6,SMX2,SNC,STC4 SWA4,SXB,SXB7,SXB9,SXE4,SXE7,SXE8,SXE9,SXEB,SXQ4,SXU,VA2,VEP7 VM2,VMA2,VME2,VSD,VSD7,VSD9,VX8,VXB,VXB7,VXB9,VXE2,VXE4,VXE6 VXE7,VXE8,VXE9,VXEB,VXP7,VXQ4
			1	-	-	-	1412957	1530148	VN27
8	17631-ZOT-801	PACKING, FUEL FILLER CAP (39X62X3)(RADICON)	1	-	-	-	--------	--------	PXU4,QHB4,SM34,SMX4
	17631-ZOT-812	PACKING, FUEL FILLER CAP (39X62X3)(TOUYOUSYA)	1	-	-	-	--------	1530148	HA2,HJA2,LKE,LX2,LXE2,LXE4,LXE8,LXQ4,LXU,PA2,PAE2,PXE8,PXU,QA2 QA26,QAA2,QAE2,QAE6,QAW,QC2,QDW9,QE,QK4,QKA4,QMEO,QND,QNE2 QNE6,QNE8,QNE9,QNK,QNR2,QNR6,QSC2,QWA4,QWC4,QWH2,QWT2,QXB,QXB7 QXB9,QXC4,QXC6,QXC9,QXE4,QXE6,QXE7,QXE8,QXE9,QXEB,QXH9,QXQ4 QXQ7,QXS4,QXU,SCK4,SHQ4,SM32,SMC1,SMD3,SMEO,SME6,SMX2,SNC,STC4 SWA4,SXB,SXB7,SXB9,SXE4,SXE7,SXE8,SXE9,SXEB,SXQ4,SXU,VA2,VEP7 VM2,VMA2,VME2,VSD,VSD7,VSD9,VX8,VXB,VXB7,VXB9,VXE2,VXE4,VXE6 VXE7,VXE8,VXE9,VXEB,VXP7,VXQ4
			1	-	-	-	1412957	1530148	VN27
	17631-Z4H-800	PACKING, FUEL FILLER CAP (39X62X3)	1	-	-	-	1530149	1552033	HA2,HJA2,LKE,LX2,LXE2,LXE4,LXE8,LXQ4,LXU,PA2,PAE2,PXE8,PXU,QA2 QA26,QAA2,QAE2,QAE6,QAW,QC2,QDW9,QE,QK4,QKA4,QMEO,QND,QNE2 QNE6,QNE8,QNE9,QNK,QNR2,QNR6,QSC2,QWA4,QWC4,QWH2,QWT2,QXB,QXB7 QXB9,QXC4,QXC6,QXC9,QXE4,QXE6,QXE7,QXE8,QXE9,QXEB,QXH9,QXQ4 QXQ7,QXS4,QXU,SCK4,SHQ4,SM32,SMC1,SMD3,SMEO,SME6,SMX2,SNC,STC4 SWA4,SXB,SXB7,SXB9,SXE4,SXE7,SXE8,SXE9,SXEB,SXQ4,SXU,VA2,VEP7 VM2,VMA2,VME2,VN27,VSD,VSD7,VSD9,VX8,VXB,VXB7,VXB9,VXE2,VXE4 VXE6,VXE7,VXE8,VXE9,VXEB,VXP7,VXQ4

FUEL TANK(1)

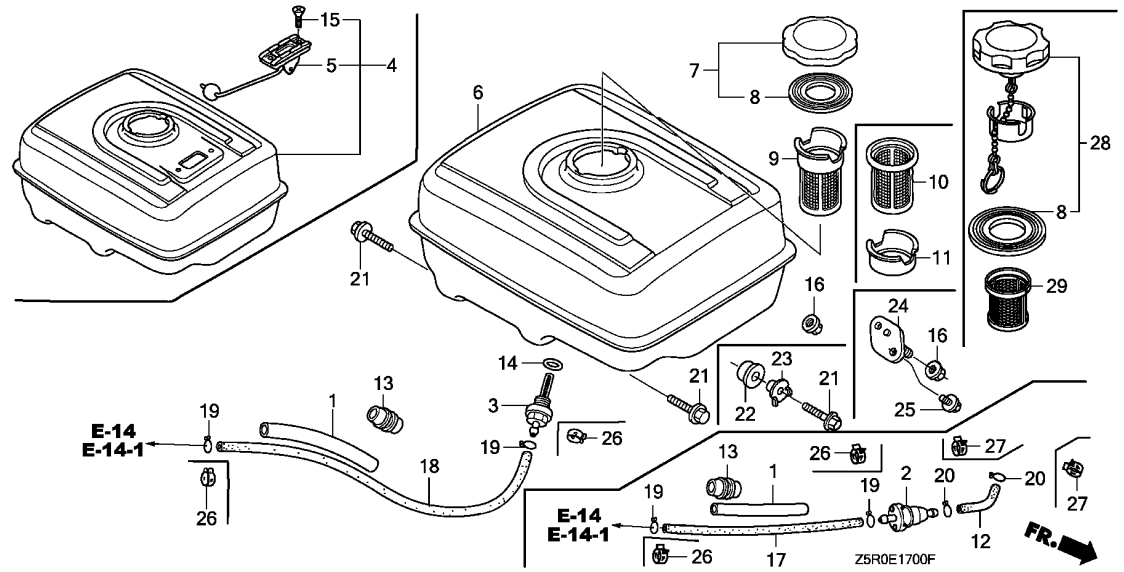

Ref. No.	Part No.	Description	Reqd. QTY GX 390 U1	GX 390 R1	GX 390 U2	GX 390 R2	Serial No.		Parts catalogue code
(8)	17631-Z0T-801	PACKING, FUEL FILLER CAP (39X62X3)(RADICON)	1	-	-	-	1552034	--------	HA2,HJA2,LKE,LX2,LXE2,LXE4,LXE8,LXQ4,LXU,PA2,PAE2,PXE8,PXU,QA2 QA26,QAA2,QAE2,QAE6,QAW,QC2,QDW9,QE,QK4,QKA4,QME0,QND,QNE2 QNE6,QNE8,QNE9,QNK,QNR2,QNR6,QSC2,QWA4,QWC4,QWH2,QWT2,QXB,QXB7 QXB9,QXC4,QXC6,QXC9,QXE4,QXE6,QXE7,QXE8,QXE9,QXEB,QXH9,QXQ4 QXQ7,QXS4,QXU,SCK4,SHQ4,SM32,SMC1,SMD3,SME0,SME6,SMX2,SNC,STC4 SWA4,SXB,SXB7,SXB9,SXE4,SXE7,SXE8,SXE9,SXEB,SXQ4,SXU,VA2,VEP7 VM2,VMA2,VME2,VN27,VSD,VSD7,VSD9,VX8,VXB,VXB7,VXB9,VXE2,VXE4 VXE6,VXE7,VXE8,VXE9,VXEB,VXP7,VXQ4
			-	-	1	-			
9	17672-ZE2-W01	FILTER, FUEL	1	-	-	-	--------	1530148	HA2,HJA2,PA2,PAE2,QA2,QA26,QAA2,QAE2,QAE6,QAW,QE,QK4,QND,QNE2 QNE6,QNE8,QNE9,QNK,QNR2,QNR6,SM32,SMC1,SMD3,SMX2,SNC,STC4,VA2 VM2,VMA2,VME2
10	17672-880-000	FILTER, FUEL	1	-	-	-	--------	1530148	QSC2
11	17673-893-000	HOLDER, FUEL FILTER	1	-	-	-	--------	1530148	QSC2
12	17701-ZK6-U30	TUBE, FUEL, 6.5X50	1	-	-	-	--------	1111074	VS49,VSD4
	17701-Z5S-U31	TUBE, FUEL, 6.3X50(FKM)	1	-	-	-	1111075	1585923	VS49,VSD4
	17701-Z5S-U32	.....	1	-	-	-	1585924	--------	VS49,VSD4
			-	1	-	-	--------	--------	VS49,VSD4
13	90854-ZB3-000	RUBBER, FUEL(9X15X20)	1	1	-	-	--------	--------	VE39,VEP9,VKE4,VKE9,VKX4,VKX9,VPE4,VPE5,VPE7,VPE9,VPX4,VPX5 VPX7,VPX9,VS39,VX39,VXG2

Ref. No.	Part No.	Description	Reqd. QTY GX 390 U1	GX 390 R1	GX 390 U2	GX 390 R2	Serial No.		Parts catalogue code
14	91353-671-004	O-RING, 14MM(NOK) ·····	1	1	1	-	--------	--------	HA2,HJA2,LKE,LX2,LXE2,LXE4,LXE8,LXQ4,LXU,PA2,PAE2,PXE8,PXM8 PXU,PXU4,QA2,QA26,QAA2,QAE2,QAE6,QAW,QC2,QDW9,QE,QHB4,QK4,QKA4 QMEO,QND,QNE2,QNE6,QNE8,QNE9,QNK,QNR2,QNR6,QSC2,QWA4,QWC4,QWH2 QWT2,QXB,QXB7,QXB9,QXC4,QXC6,QXC9,QXE4,QXE6,QXE7,QXE8,QXE9 QXEB,QXH9,QXQ4,QXQ7,QXS4,QXU,SCK4,SHQ4,SM32,SM34,SMC1,SMD3 SMEO,SME6,SMX2,SMX4,SNC,STC4,SWA4,SXB,SXB7,SXB9,SXE4,SXE7,SXE8 SXE9,SXEB,SXQ4,SXU,VA2,VEP7,VM2,VMA2,VME2,VSD,VSD7,VSD9,VX8 VXB,VXB7,VXB9,VXE2,VXE4,VXE6,VXE7,VXE8,VXE9,VXEB,VXP7,VXQ4
			1	-	-	-	1412957	--------	VN27
15	93600-05010-0A	SCREW, FLAT, 5X10 ·····	2	-	-	-	--------	--------	STC4,VM2,VME2
16	94050-08000	NUT, FLANGE, 8MM ·····	2	2	2	-	--------	--------	HA2,HJA2,LKE,LX2,LXE2,LXE4,LXE8,LXQ4,LXU,PA2,PAE2,PXE8,PXU PXU4,QA2,QA26,QAA2,QAE2,QAE6,QAW,QC2,QDW9,QE,QHB4,QK4,QKA4 QMEO,QND,QNE2,QNE6,QNE8,QNE9,QNK,QNR2,QNR6,QSC2,QWA4,QWC4,QWH2 QWT2,QXB,QXB7,QXB9,QXC4,QXC6,QXC9,QXE4,QXE6,QXE7,QXE8,QXE9 QXEB,QXH9,QXQ4,QXQ7,QXS4,QXU,SCK4,SHQ4,SM32,SM34,SMC1,SMD3 SMEO,SME6,SMX2,SMX4,SNC,STC4,SWA4,SXB,SXB7,SXB9,SXE4,SXE7,SXE8 SXE9,SXEB,SXQ4,SXU,VA2,VEP7,VM2,VMA2,VME2,VS49,VSD,VSD7,VSD9 VX8,VXB,VXB7,VXB9,VXE2,VXE4,VXE6,VXE7,VXE8,VXE9,VXEB,VXP7,VXQ4
			2	-	-	-	1412957	--------	VN27
17	91424-Z4J-811	TUBE, FUEL, 4.5X300(FKM) ····	1	-	-	-	--------	--------	VEP9
	95001-45400-40	TUBE, FUEL, 4.5X400 (95001-45001-60M)	1	-	-	-	--------	1101704	VTH4
	95001-45180-40	TUBE, FUEL, 4.5X180 (95001-45001-60M)	1	-	-	-	--------	1102787	VE39,VKE4,VKE9,VKX4,VKX9,VPE4,VPE5,VPE7,VPE9,VPX4,VPX5,VPX7 VPX9,VS39,VX39
	95001-45250-40	TUBE, FUEL, 4.5X250 (95001-45001-60M)	1	-	-	-	--------	1111074	VS49,VSD4
	91424-Z5L-811	TUBE, FUEL, 4.5X165(FKM) ····	1	-	-	-	--------	1608726	VWS
	91424-Z4G-821	TUBE, FUEL, 4.5X400(FKM) ····	1	-	-	-	1101705	--------	VTH4
	91424-Z4K-801	TUBE, FUEL, 4.5X180(FKM) ····	1	-	-	-	1102788	--------	VE39,VKE9,VKX9,VX39
			1	-	-	-	1102788	1593247	VKE4,VKX4,VPE4,VPE5,VPE7,VPE9,VPX4,VPX5,VPX7,VPX9,VS39
	91424-Z5S-801	TUBE, FUEL, 4.5X250(FKM) ····	1	-	-	-	1111075	1585923	VS49,VSD4
	91424-Z5S-802	·····	1	-	-	-	1585924	--------	VS49,VSD4
	91424-Z4K-802	TUBE, FUEL, 4.5X180(FKM) ····	1	-	-	-	1593248	--------	VKE4,VKX4,VPE4,VPE5,VPE7,VPE9,VPX4,VPX5,VPX7,VPX9,VS39
	91424-Z5L-812	TUBE, FUEL, 4.5X165(FKM) ····	1	-	-	-	1608727	--------	VWS
	91424-Z4J-812	TUBE, FUEL, 4.5X300(FKM) ····	-	1	-	-	--------	--------	VEP9
	91424-Z4K-802	TUBE, FUEL, 4.5X180(FKM) ····	-	1	-	-	--------	--------	VKE4,VKX4,VPE4,VPE5,VPE7,VPE9,VPX4,VPX5,VPX7,VPX9,VS39
	91424-Z5S-802	TUBE, FUEL, 4.5X250(FKM) ····	-	1	-	-	--------	--------	VS49,VSD4
	91424-Z4G-822	TUBE, FUEL, 4.5X400(FKM) ····	-	1	-	-	--------	--------	VTH4
	91424-Z5L-812	TUBE, FUEL, 4.5X165(FKM) ····	-	1	-	-	--------	--------	VWS
18	91424-Z5L-821	TUBE, FUEL, 4.5X580(FKM) ····	1	1	-	-	--------	1593861	QNB2
	91424-Z5L-822	·····	1	1	-	-	1593862	--------	QNB2
	91424-Z5L-802	TUBE, FUEL, 4.5X235(FKM) ····	1	-	-	-	--------	--------	PXU4,SM34,SMX4
	95001-45235-40	TUBE, FUEL, 4.5X235 (95001-45001-60M)	1	-	-	-	--------	1105013	HA2,HJA2,LKE,LX2,LXE2,LXE4,LXE8,LXQ4,LXU,PA2,PAE2,PXE8,PXU,QA2 QA26,QAA2,QAE2,QAE6,QAW,QC2,QDW9,QE,QK4,QKA4,QKB2,QMEO,QND QNE2,QNE6,QNE8,QNE9,QNK,QNR2,QNR6,QSC2,QTR2,QWA2,QWA4,QWC4 QWH2,QWT2,QXB,QXB7,QXB9,QXC4,QXC6,QXC9,QXE4,QXE6,QXE7,QXE8 QXE9,QXEB,QXQ4,QXQ7,QXS4,QXU,SCK4,SHQ4,SM32,SMC1,SMD3,SMEO SME6,SMX2,SNC,STC4,SWA4,SXB,SXB7,SXB9,SXE4,SXE7,SXE8,SXE9,SXEB SXQ4,SXU,VA2,VAC2,VAG2,VC2,VD2,VDB2,VDE2,VEP7,VKB2,VM2,VMA2 VME2,VMS2,VN17,VN27,VNG1,VNG2,VNS9,VSD,VSD7,VSD9,VWC,VWE,VX8 VXB,VXB7,VXB9,VXE2,VXE4,VXE6,VXE7,VXE8,VXE9,VXEB,VXG,VXG2,VXP7 VXQ4
	95001-45430-40	TUBE, FUEL, 4.5X430 (95001-45001-60M)	1	-	-	-	--------	1116145	VCN2

FUEL TANK(1)

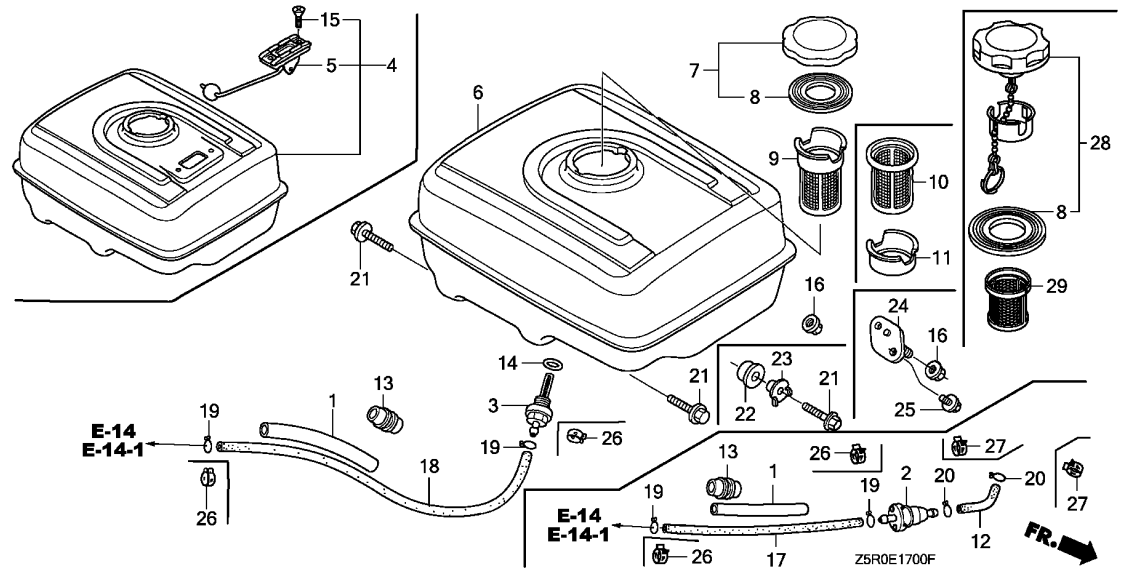

Ref. No.	Part No.	Description	Reqd. QTY GX 390 U1	GX 390 R1	GX 390 U2	GX 390 R2	Serial No.		Parts catalogue code
18)	91424-Z5L-801	TUBE, FUEL, 4.5X235(FKM) ----	1	-	-	-	--------	1588552	QHB4,QXH9,VC2N
			1	-	-	-	1105014	--------	LXE8,LXU,QA26,QAA2,QNE9,QTR2,QXB,QXEB,SXE7,SXE8,SXE9,SXEB,SXQ4 VEP7,VMA2,VME2,VMS2,VNG2,VX8,VXE8,VXEB,VXG2,VXP7
			1	-	-	-	1105014	1588552	HA2,HJA2,LKE,LX2,LXE2,LXE4,LXQ4,PA2,PAE2,PXE8,PXU,QA2,QAE2 QAE6,QAW,QC2,QDW9,QE,QK4,QKA4,QKB2,QMEO,QND,QNE2,QNE6,QNE8,QNK QNR2,QNR6,QSC2,QWA2,QWA4,QWC4,QWH2,QWT2,QXB7,QXB9,QXC4,QXC6 QXC9,QXE4,QXE6,QXE7,QXE8,QXE9,QXQ4,QXQ7,QXS4,QXU,SCK4,SHQ4 SM32,SMC1,SMD3,SMEO,SME6,SMX2,SNC,STC4,SWA4,SXB,SXB7,SXB9,SXE4 SXU,VA2,VAC2,VAG2,VC2,VD2,VDB2,VDE2,VKB2,VM2,VN17,VN27,VNG1 VNS9,VSD,VSD7,VSD9,VWC,VWE,VXB,VXB7,VXB9,VXE2,VXE4,VXE6,VXE7 VXE9,VXG,VXQ4
	91424-Z4J-821	TUBE, FUEL, 4.5X430(FKM) ----	1	-	-	-	1116146	--------	VCN2
	91424-Z5L-802	TUBE, FUEL, 4.5X235(FKM) ----	1	-	-	-	1588553	--------	HA2,HJA2,LKE,LX2,LXE2,LXE4,LXQ4,PA2,PAE2,PXE8,PXU,QA2,QAE2 QAE6,QAW,QC2,QDW9,QE,QHB4,QK4,QKA4,QKB2,QMEO,QND,QNE2,QNE6 QNE8,QNK,QNR2,QNR6,QSC2,QWA2,QWA4,QWC4,QWH2,QWT2,QXB7,QXB9 QXC4,QXC6,QXC9,QXE4,QXE6,QXE7,QXE8,QXE9,QXH9,QXQ4,QXQ7,QXS4 QXU,SCK4,SHQ4,SM32,SMC1,SMD3,SMEO,SME6,SMX2,SNC,STC4,SWA4,SXB SXB7,SXB9,SXE4,SXU,VA2,VAC2,VAG2,VC2,VC2N,VD2,VDB2,VDE2,VKB2 VM2,VN17,VN27,VNG1,VNS9,VSD,VSD7,VSD9,VWC,VWE,VXB,VXB7,VXB9 VXE2,VXE4,VXE6,VXE7,VXE9,VXG,VXQ4
			-	1	-	-	--------	--------	QKB2,QWA2,VAC2,VD2,VDB2,VN17,VNG1,VNS9,VXG
	91424-Z4J-822	TUBE, FUEL, 4.5X430(FKM) ----	-	1	-	-	--------	--------	VCN2
	91424-Z5L-801	TUBE, FUEL, 4.5X235(FKM) ----	-	1	-	-	--------	1588552	VAG2,VC2,VDE2,VK2,VKB2,VWC,VWE
	91424-Z5L-802	----------	-	1	-	-	1588553	--------	VAG2,VC2,VDE2,VK2,VKB2,VWC,VWE
	91424-Z5T-003	----------	-	-	1	-			

Ref. No.	Part No.	Description	Reqd. QTY GX 390 U1	GX 390 R1	GX 390 U2	GX 390 R2	Serial No.		Parts catalogue code
19	95002-02080	CLIP, TUBE(B8)	2	-	-	-	--------	1101704	VTH4
			2	-	-	-	--------	1102787	VE39,VKE4,VKE9,VKX4,VKX9,VPE4,VPE5,VPE7,VPE9,VPX4,VPX5,VPX7 VPX9,VS39,VX39
			2	-	-	-	--------	1105013	HA2,HJA2,LKE,LX2,LXE2,LXE4,LXE8,LXQ4,LXU,PA2,PAE2,PXE8,PXU,QA2 QA26,QAA2,QAE2,QAE6,QAW,QC2,QDW9,QE,QK4,QKA4,QKB2,QMEO,QND QNE2,QNE6,QNE8,QNE9,QNK,QNR2,QNR6,QSC2,QTR2,QWA2,QWA4,QWC4 QWH2,QWT2,QXB,QXB7,QXB9,QXC4,QXC6,QXC9,QXE4,QXE6,QXE7,QXE8 QXE9,QXEB,QXQ4,QXQ7,QXS4,QXU,SCK4,SHQ4,SM32,SMC1,SMD3,SMEO SME6,SMX2,SNC,STC4,SWA4,SXB,SXB7,SXB9,SXE4,SXE7,SXE8,SXE9,SXEB SXQ4,SXU,VA2,VAC2,VAG2,VC2,VD2,VDB2,VDE2,VEP7,VK2,VKB2,VM2 VMA2,VME2,VMS2,VN17,VN27,VNG1,VNG2,VNS9,VSD,VSD7,VSD9,VWC,VWE VX8,VXB,VXB7,VXB9,VXE2,VXE4,VXE6,VXE7,VXE8,VXE9,VXEB,VXG,VXG2 VXP7,VXQ4
			2	-	-	-	--------	1111074	VS49,VSD4
			2	-	-	-	--------	1116145	VCN2
20	95002-70000	CLIP, TUBE(C11)	2	-	-	-	--------	1111074	VS49,VSD4
21	95701-08025-00	BOLT, FLANGE, 8X25	2	-	2	-	--------	--------	HA2,HJA2,LKE,LX2,LXE2,LXE4,LXE8,LXQ4,LXU,PA2,PAE2,PXE8,PXU PXU4,QA2,QA26,QAA2,QAE2,QAE6,QAW,QC2,QDW9,QE,QHB4,QK4,QKA4 QMEO,QND,QNE2,QNE6,QNE8,QNE9,QNK,QNR2,QNR6,QSC2,QWA4,QWC4,QWH2 QWT2,QXB,QXB7,QXB9,QXC4,QXC6,QXC9,QXE4,QXE6,QXE7,QXE8,QXE9 QXEB,QXH9,QXQ4,QXQ7,QXS4,QXU,SCK4,SHQ4,SM32,SM34,SMC1,SMD3 SMEO,SME6,SMX2,SMX4,SNC,STC4,SWA4,SXB,SXB7,SXB9,SXE4,SXE7,SXE8 SXE9,SXEB,SXQ4,SXU,VA2,VEP7,VM2,VMA2,VME2,VSD,VSD7,VSD9,VX8 VXB,VXB7,VXB9,VXE2,VXE4,VXE6,VXE7,VXE8,VXE9,VXEB,VXP7,VXQ4
			2	-	-	-	1412957	--------	VN27
22	17532-ZK6-880	RUBBER A, TANK MOUNTING	2	-	-	-	--------	1575846	VSD9,VXB9,VXE9
	17532-ZK6-881		2	-	-	-	1575847	--------	VSD9,VXB9,VXE9
23	17534-ZK6-880	NUT, TANK MOUNTING	2	-	-	-	--------	1575846	VSD9,VXB9,VXE9
	17534-ZK6-881		2	-	-	-	1575847	--------	VSD9,VXB9,VXE9
24	17536-ZK6-880	RUBBER COMP., TANK MOUNTING	2	-	-	-	--------	--------	VSD9,VXB9,VXE9
25	90008-ZE2-003	BOLT, FLANGE, 6X10	4	-	-	-	--------	--------	VSD9,VXB9,VXE9
26	95002-40800-08	CLAMP, TUBE(D8)	2	-	-	-	--------	--------	PXU4,QHB4,QNB2,QXH9,SM34,SMX4,VC2N,VEP9
			2	-	-	-	1101705	--------	VTH4
			2	-	-	-	1102788	--------	VE39,VKE4,VKE9,VKX4,VKX9,VPE4,VPE5,VPE7,VPE9,VPX4,VPX5,VPX7 VPX9,VS39,VX39
			2	-	-	-	1105014	--------	HA2,HJA2,LKE,LX2,LXE2,LXE4,LXE8,LXQ4,LXU,PA2,PAE2,PXE8,PXU,QA2 QA26,QAA2,QAE2,QAE6,QAW,QC2,QDW9,QE,QK4,QKA4,QKB2,QMEO,QND QNE2,QNE6,QNE8,QNE9,QNK,QNR2,QNR6,QSC2,QTR2,QWA2,QWA4,QWC4 QWH2,QWT2,QXB,QXB7,QXB9,QXC4,QXC6,QXC9,QXE4,QXE6,QXE7,QXE8 QXE9,QXEB,QXQ4,QXQ7,QXS4,QXU,SCK4,SHQ4,SM32,SMC1,SMD3,SMEO SME6,SMX2,SNC,STC4,SWA4,SXB,SXB7,SXB9,SXE4,SXE7,SXE8,SXE9,SXEB SXQ4,SXU,VA2,VAC2,VAG2,VC2,VD2,VDB2,VDE2,VEP7,VK2,VKB2,VM2 VMA2,VME2,VMS2,VN17,VN27,VNG1,VNG2,VNS9,VSD,VSD7,VSD9,VWC,VWE VX8,VXB,VXB7,VXB9,VXE2,VXE4,VXE6,VXE7,VXE8,VXE9,VXEB,VXG,VXG2 VXP7,VXQ4
			2	-	-	-	1111075	--------	VS49,VSD4
			2	-	-	-	1116146	--------	VCN2
			-	2	2	-	--------	--------	PXE8,PXM8,PXU,PXU4,QKB2,QNB2,QWA2,QXE8,QXU,SM32,SM34,SMX2,SXE4 VAC2,VAG2,VC2,VCN2,VD2,VDB2,VDE2,VEP9,VK2,VKB2,VKE4,VKX4,VN17 VNG1,VNS9,VPE4,VPE5,VPE7,VPE9,VPX4,VPX5,VPX7,VPX9,VS39,VS49 VSD4,VTH4,VWC,VWE,VXG
27	95002-41050-08	CLAMP, TUBE(D10.5)	2	-	-	-	1111075	--------	VS49,VSD4
			-	2	-	-	--------	--------	VS49,VSD4
28	17620-Z4H-020	CAP COMP., FUEL FILLER	1	-	-	-	--------	--------	PXU4,QHB4,SM34,SMX4

FUEL TANK(1)

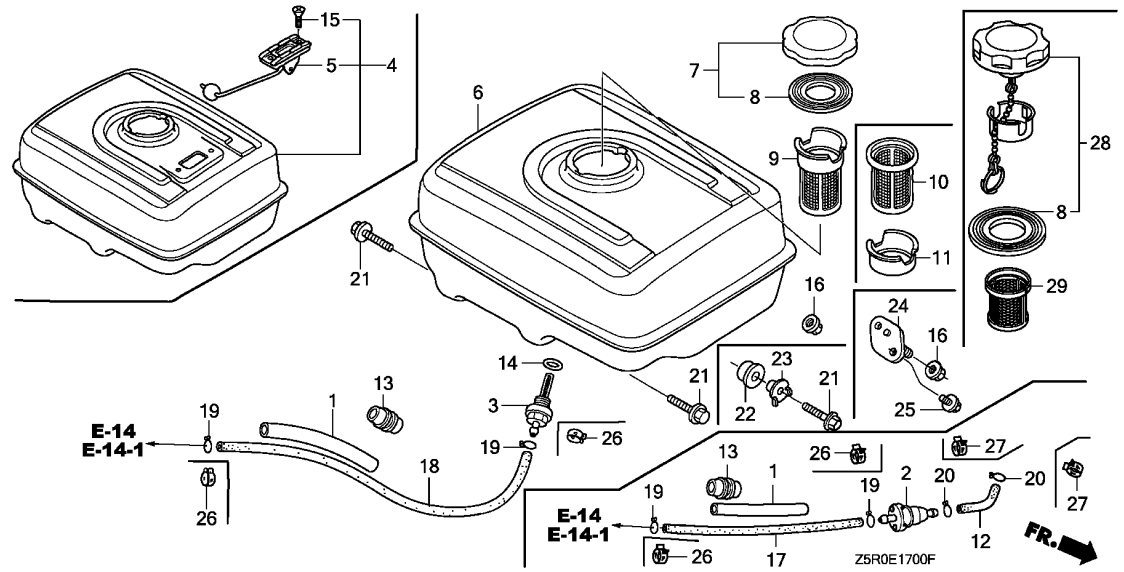

Ref. No.	Part No.	Description	Reqd. QTY GX 390 U1	GX 390 R1	GX 390 U2	GX 390 R2	Serial No.		Parts catalogue code
28)	17620-Z4H-010	CAP COMP., FUEL FILLER ------	1	-	-	-	1530149	1552033	HA2,HJA2,LKE,LX2,LXE2,LXE4,LXE8,LXQ4,LXU,PA2,PAE2,PXE8,PXU,QA2 QA26,QAA2,QAE2,QAE6,QAW,QC2,QDW9,QE,QK4,QKA4,QMEO,QND,QNE2 QNE6,QNE8,QNE9,QNK,QNR2,QNR6,QSC2,QWA4,QWC4,QWH2,QWT2,QXB,QXB7 QXB9,QXC4,QXC6,QXC9,QXE4,QXE6,QXE7,QXE8,QXE9,QXEB,QXH9,QXQ4 QXQ7,QXS4,QXU,SCK4,SHQ4,SM32,SMC1,SMD3,SMEO,SME6,SMX2,SNC,STC4 SWA4,SXB,SXB7,SXB9,SXE4,SXE7,SXE8,SXE9,SXEB,SXQ4,SXU,VA2,VEP7 VM2,VMA2,VME2,VN27,VSD,VSD7,VSD9,VX8,VXB,VXB7,VXB9,VXE2,VXE4 VXE6,VXE7,VXE8,VXE9,VXEB,VXP7,VXQ4
	17620-Z4H-020	----------	1	-	-	-	1552034	--------	HA2,HJA2,LKE,LX2,LXE2,LXE4,LXE8,LXQ4,LXU,PA2,PAE2,PXE8,PXU,QA2 QA26,QAA2,QAE2,QAE6,QAW,QC2,QDW9,QE,QK4,QKA4,QMEO,QND,QNE2 QNE6,QNE8,QNE9,QNK,QNR2,QNR6,QSC2,QWA4,QWC4,QWH2,QWT2,QXB,QXB7 QXB9,QXC4,QXC6,QXC9,QXE4,QXE6,QXE7,QXE8,QXE9,QXEB,QXH9,QXQ4 QXQ7,QXS4,QXU,SCK4,SHQ4,SM32,SMC1,SMD3,SMEO,SME6,SMX2,SNC,STC4 SWA4,SXB,SXB7,SXB9,SXE4,SXE7,SXE8,SXE9,SXEB,SXQ4,SXU,VA2,VEP7 VM2,VMA2,VME2,VN27,VSD,VSD7,VSD9,VX8,VXB,VXB7,VXB9,VXE2,VXE4 VXE6,VXE7,VXE8,VXE9,VXEB,VXP7,VXQ4
			-	-	1	-			
29	17672-Z4H-000	FILTER, FUEL ----------	1	-	-	-	--------	--------	QHB4,SM34,SMX4
			1	-	-	-	1530149	--------	HA2,HJA2,PA2,PAE2,QA2,QA26,QAA2,QAE2,QAE6,QAW,QE,QK4,QND,QNE2 QNE6,QNE8,QNE9,QNK,QNR2,QNR6,QSC2,SM32,SMC1,SMD3,SMX2,SNC,STC4 VA2,VM2,VMA2,VME2
			-	-	1	-	--------	--------	SM32,SM34,SMX2

FUEL TANK(2)

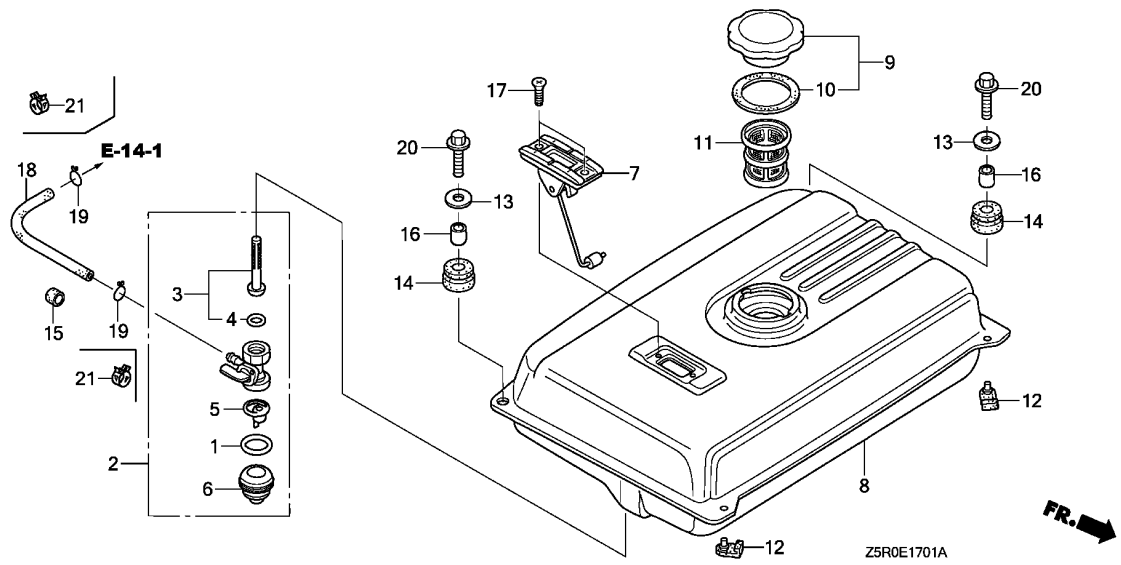

Ref. No.	L.O.N.	(Relative ref. Number) Description	F.R.T.

Ref. No.	Part No.	Description	Reqd. QTY GX 390 U1	GX 390 R1	GX 390 U2	GX 390 R2	Serial No.		Parts catalogue code
1	16173-001-004	PACKING, FUEL STRAINER CUP --	1	1	-	-	--------	--------	VAA1,VAA8
2	16950-ZB4-015	COCK ASSY., FUEL ----------	1	1	-	-	--------	--------	VAA1,VAA8
3	16952-ZB4-005	SCREEN SET, FUEL STRAINER ---	1	1	-	-	--------	--------	VAA1,VAA8
4	16958-397-771	O-RING, 9.0X1.3 ----------	1	1	-	-	--------	--------	VAA1,VAA8
5	16959-471-831	FILTER, CUP ----------	1	1	-	-	--------	--------	VAA1,VAA8
6	16967-GA6-671	CUP, FUEL STRAINER ----------	1	1	-	-	--------	--------	VAA1,VAA8
7	17505-ZB2-003	METER ASSY., FUEL ----------	1	1	-	-	--------	--------	VAA1,VAA8
8	17510-ZC2-000ZJ	TANK COMP., FUEL *R280*.....POWER RED	1	1	-	-	--------	--------	VAA1,VAA8
9	17620-899-013	CAP COMP., FUEL FILLER ------	1	1	-	-	--------	--------	VAA1,VAA8
10	17631-899-000	PACKING, FUEL FILLER CAP ----	1	1	-	-	--------	--------	VAA1,VAA8
11	17672-899-000	FILTER, FUEL ----------	1	1	-	-	--------	--------	VAA1,VAA8
12	50319-ZB2-000	RUBBER, TANK MOUNTING -------	2	2	-	-	--------	--------	VAA1,VAA8
13	90503-898-000	WASHER, TANK CUSHION --------	2	2	-	-	--------	--------	VAA1,VAA8
14	90851-898-000	RUBBER, TANK CUSHION --------	2	2	-	-	--------	--------	VAA1,VAA8
15	90854-ZB2-000	RUBBER, FUEL(9X15X10) -------	1	1	-	-	--------	--------	ED6,EDS2,EDS6,EDT6,EN6,ENT2,VAA1,VAA8
			-	-	-	1	--------	--------	VWS
16	91551-898-000	COLLAR, TANK CUSHION --------	2	2	-	-	--------	--------	VAA1,VAA8
17	93600-05010-0A	SCREW, FLAT, 5X10 ----------	2	2	-	-	--------	--------	VAA1,VAA8
18	95001-45150-40	TUBE, FUEL, 4.5X150 (95001-45001-60M)	1	-	-	-	--------	1101673	EDS2,EDS6,EDT6
	95001-45165-40	TUBE, FUEL, 4.5X165 (95001-45001-60M)	1	-	-	-	--------	1112240	EN6,ENT2
	91424-Z4J-801	TUBE, FUEL, 4.5X150(FKM) ----	1	-	-	-	1101674	1585140	EDS2,EDS6,EDT6
	91424-Z5L-811	TUBE, FUEL, 4.5X165(FKM) ----	1	-	-	-	1112241	1608726	EN6,ENT2
	91424-Z4J-802	TUBE, FUEL, 4.5X150(FKM) ----	1	-	-	-	1585141	--------	EDS2,EDS6,EDT6

FUEL TANK(2)

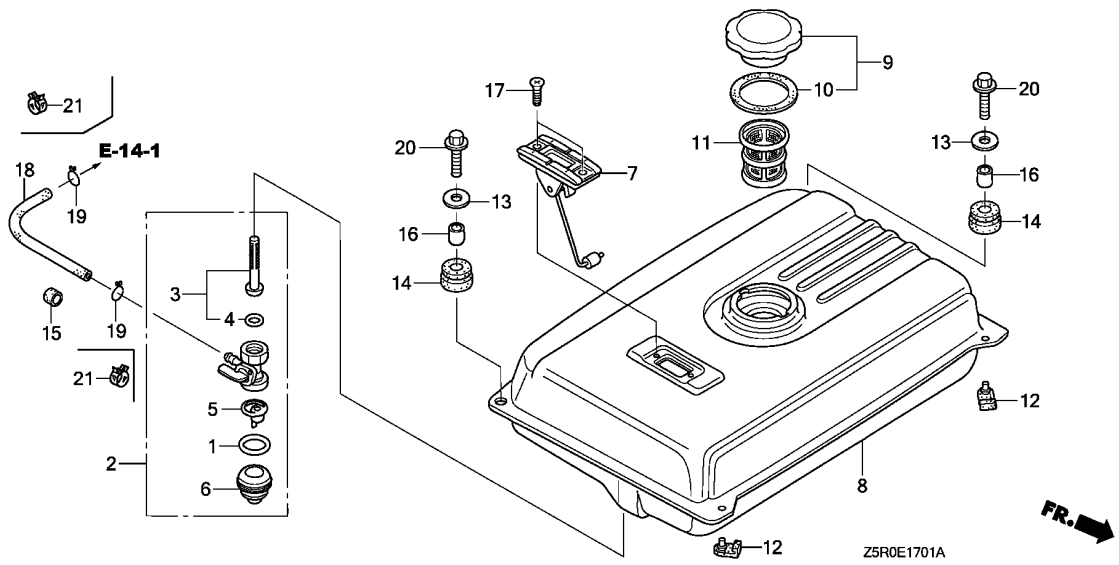

Ref. No.	Part No.	Description	Reqd. QTY GX 390 U1	GX 390 R1	GX 390 U2	GX 390 R2	Serial No.		Parts catalogue code
18)	91424-Z5L-812	TUBE, FUEL, 4.5X165(FKM) ····	1	-	-	-	1608727	--------	EN6,ENT2
	91424-Z4J-802	TUBE, FUEL, 4.5X150(FKM) ····	-	1	-	-	--------	--------	EDS2,EDS6,EDT6
	91424-Z5L-812	TUBE, FUEL, 4.5X165(FKM) ····	-	1	-	-	--------	--------	EN6,ENT2
			-	-	-	1	--------	--------	VWS
19	95002-02080	CLIP, TUBE(B8) ·····	2	-	-	-	--------	1101673	EDS2,EDS6,EDT6
			2	-	-	-	--------	1112240	EN6,ENT2
20	95701-06022-00	BOLT, FLANGE, 6X22 ·····	2	2	-	-	--------	--------	VAA1,VAA8
21	95002-40800-08	CLAMP, TUBE(D8) ·····	2	-	-	-	1101674	--------	EDS2,EDS6,EDT6
			2	-	-	-	1112241	--------	EN6,ENT2
			-	2	-	-	--------	--------	EDS2,EDS6,EDT6,EN6,ENT2
			-	-	-	1	--------	--------	VWS

FLYWHEEL

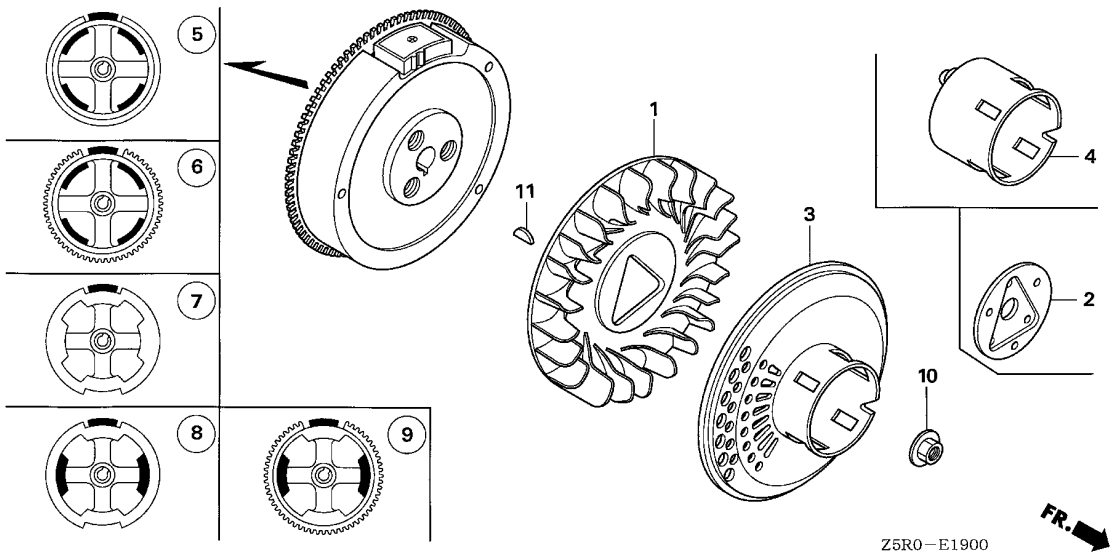

Ref. No.	L.O.N.	(Relative ref. Number) Description	F.R.T.

Ref. No.	Part No.	Description	Reqd. QTY GX 390 U1	GX 390 R1	GX 390 U2	GX 390 R2	Serial No.	Parts catalogue code
1	19511-ZE3-000	FAN, COOLING	1	1	1	1	-------- --------	ED6,EDD2,EDS2,EDS6,EDT6,EN6,ENT2,HA2,HJA2,LKE,LX2,LXE2,LXE4 LXE8,LXQ4,LXU,PA2,PAE2,PXE8,PXM8,PXU,PXU4,QA2,QA26,QAA2,QAE2 QAE6,QAW,QC2,QDW9,QE,QHB4,QK4,QKA4,QKB2,QMEO,QNB2,QND,QNE2 QNE6,QNE8,QNE9,QNK,QNR2,QNR6,QSC2,QTR2,QWA2,QWA4,QWC4,QWH2 QWT2,QXB,QXB7,QXB9,QXC4,QXC6,QXC9,QXE4,QXE6,QXE7,QXE8,QXE9 QXEB,QXH9,QXQ4,QXQ7,QXS4,QXU,SCK4,SHQ4,SM32,SM34,SMC1,SMD3 SMEO,SME6,SMX2,SMX4,SNC,STC4,SWA4,SXB,SXB7,SXB9,SXE4,SXE7,SXE8 SXE9,SXEB,SXQ4,SXU,VA2,VAA1,VAA8,VAC2,VAG2,VC2,VC2N,VCN2,VD2 VDB2,VDE2,VEP7,VK2,VKB2,VKE4,VKX4,VM2,VMA2,VME2,VMS2,VN17,VN27 VNG1,VNG2,VPE4,VPE5,VPE7,VPX4,VPX5,VPX7,VSD,VSD4,VSD7,VTH4 VWA2,VWC,VWC7,VWE,VWS,VWT4,VX8,VXB,VXB7,VXE2,VXE4,VXE6,VXE7 VXE8,VXEB,VXG,VXG2,VXP7,VXQ4
	19511-ZK6-880	.....	1	1	-	-	-------- --------	VE39,VEP9,VKE9,VKX9,VNS9,VPE9,VPX9,VS39,VS49,VSD9,VWC9,VX39 VXB9,VXE9
2	19512-ZE2-000	PLATE, COOLING FAN SETTING ..	1	-	-	-	-------- --------	LKE,QTR2
3	28450-ZE3-W11	PULLEY COMP., STARTER (SCREEN GRID)	1	1	1	1	-------- --------	HA2,HJA2,LX2,LXE2,LXE4,LXE8,LXQ4,LXU,PA2,PAE2,PXE8,PXM8,PXU PXU4,QA2,QA26,QAE2,QAE6,QAW,QC2,QDW9,QE,QHB4,QKA4,QKB2,QMEO QNB2,QND,QNE2,QNE6,QNE8,QNE9,QNK,QNR2,QNR6,QSC2,QWA2,QWH2,QWT2 QXB,QXB7,QXB9,QXC4,QXC6,QXC9,QXE4,QXE6,QXE7,QXE8,QXE9,QXEB QXH9,QXQ4,QXQ7,QXU,SCK4,SHQ4,SMC1,SMEO,SME6,SMX2,SMX4,STC4 SWA4,SXB,SXB7,SXB9,SXE4,SXE7,SXE8,SXE9,SXEB,SXQ4,SXU,VA2,VAA1 VAA8,VAC2,VAG2,VD2,VDE2,VEP7,VK2,VKB2,VM2,VMA2,VME2,VMS2,VN17 VN27,VNG1,VNG2,VSD,VSD7,VWA2,VWC7,VWT4,VX8,VXB,VXB7,VXE2,VXE4 VXE6,VXE7,VXE8,VXEB,VXP7,VXQ4
4	28451-ZE3-W01	PULLEY, STARTER	1	1	1	1	-------- --------	ED6,EDD2,EDS2,EDS6,EDT6,EN6,ENT2,QAA2,QK4,QWA4,QWC4,QXS4,SM32 SM34,SMD3,SNC,VC2,VC2N,VCN2,VDB2,VE39,VEP9,VKE4,VKE9,VKX4,VKX9 VNS9,VPE4,VPE5,VPE7,VPE9,VPX4,VPX5,VPX7,VPX9,VS39,VS49,VSD4 VSD9,VTH4,VWC,VWC9,VWE,VWS,VX39,VXB9,VXE9,VXG,VXG2

FLYWHEEL

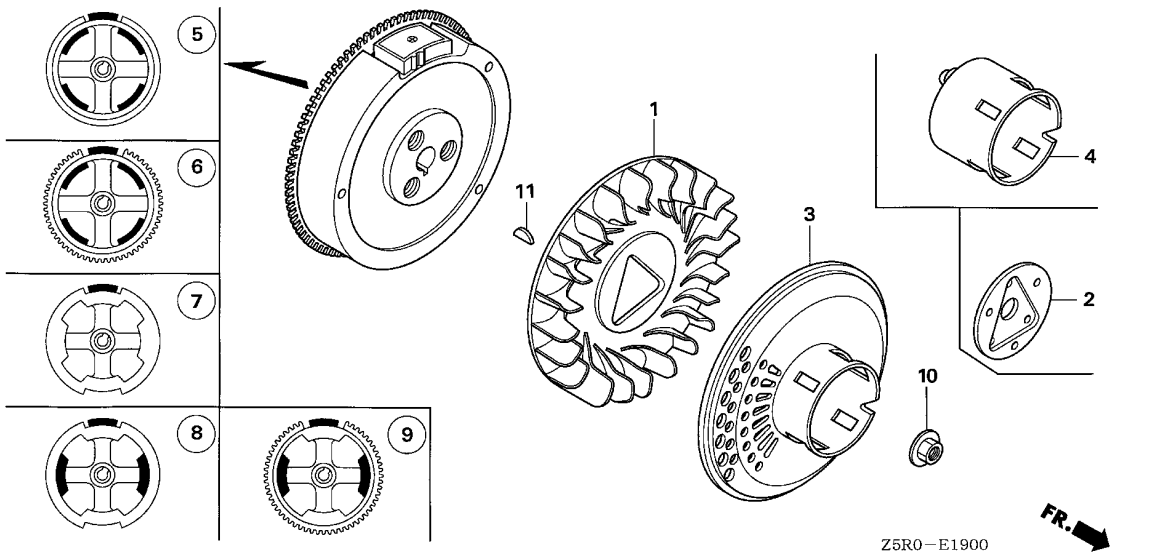

Ref. No.	Part No.	Description	Reqd. QTY GX 390 U1	GX 390 R1	GX 390 U2	GX 390 R2	Serial No.		Parts catalogue code
5	31100-ZE3-U10	FLYWHEEL COMP.(4POLE) ·····	1	-	-	-	--------	--------	QWC4
6	31100-ZE3-W01	FLYWHEEL COMP.(SEL-4POLE) ···	1	1	-	-	--------	--------	ED6,EDD2,EN6,ENT2,HJA2,LKE,PAE2,QAE2,QAE6,QC2,QKA4,QKB2,QMEO QNB2,QNE2,QNE6,QNE8,QNE9,QNK,QSC2,QTR2,QWA2,QXH9,SCK4,SM32 SM34,SMEO,SME6,STC4,VDB2,VK2,VKE4,VKE9,VN27,VNG2,VNS9,VTH4
	31100-ZE3-W21	FLYWHEEL COMP.(SEL-18A) ·····	1	-	-	-	--------	--------	QND,QNR2,QNR6,QWH2
	31110-Z5T-840	FLYWHEEL COMP.(SEL-4POLE) ···	-	-	1	1	--------	--------	ED6,EDD2,EN6,ENT2,SM32,SM34
7	31100-ZE3-701	FLYWHEEL COMP. ·····	1	1	-	-	--------	--------	EDT6,HA2,LX2,LXQ4,LXU,PA2,PXU,PXU4,QA2,QA26,QAA2,QAW,QDW9,QE QHB4,QK4,QWA4,QWT2,QXB,QXB7,QXB9,QXC4,QXC6,QXC9,QXQ4,QXQ7,QXS4 QXU,SHQ4,SMD3,SMX2,SMX4,SNC,SWA4,SXB,SXB7,SXB9,SXQ4,SXU,VA2 VAA1,VAC2,VAG2,VD2,VKX4,VKX9,VN17,VNG1,VPX4,VPX5,VPX7,VPX9 VS39,VSD,VSD7,VSD9,VWC,VWC7,VWC9,VWS,VX39,VX8,VXB,VXB7,VXB9 VXG,VXG2,VXP7,VXQ4
	31110-Z5T-000	·····	-	-	1	1	--------	--------	EDT6,PXU,PXU4,QXU,SMX2,VWS
8	31100-ZE3-712	FLYWHEEL COMP.(LAMP) ·····	1	1	-	-	--------	--------	SMC1,VEP9,VM2,VMA2
9	31100-ZE3-722	FLYWHEEL COMP.(SEL-LAMP) ····	1	1	-	-	--------	--------	EDS2,EDS6,LXE2,LXE4,LXE8,PXE8,PXM8,QXE4,QXE6,QXE7,QXE8,QXE9 QXEB,SXE4,SXE7,SXE8,SXE9,SXEB,VAA8,VC2,VC2N,VCN2,VDE2,VE39 VEP7,VKB2,VME2,VMS2,VPE4,VPE5,VPE7,VPE9,VS49,VSD4,VWA2,VWE VWT4,VXE2,VXE4,VXE6,VXE7,VXE8,VXE9,VXEB
	31110-Z5T-820	·····	-	-	1	1	--------	--------	EDS6,PXE8,PXM8,QXE8,SXE4
10	90201-ZE3-790	NUT, SPECIAL, 16MM ·····	1	-	-	-	--------	--------	PXU4,QHB4,QXH9,SM34,SMX4,VC2N,VWS

FLYWHEEL

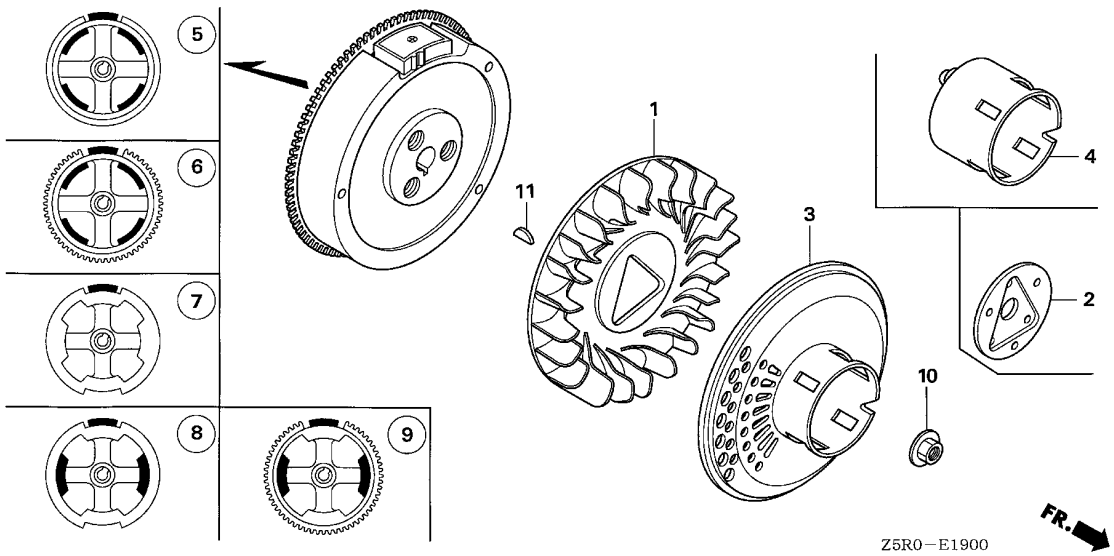

Ref. No.	Part No.	Description	Reqd. QTY GX 390 U1	GX 390 R1	GX 390 U2	GX 390 R2	Serial No.	Parts catalogue code
10)	90201-ZE3-V00	NUT, SPECIAL, 16MM	1	-	-	-	-------- 1317976	ED6,EDD2,EDS2,EDS6,EDT6,EN6,ENT2,HA2,HJA2,LKE,LX2,LXE2,LXE4 LXE8,LXQ4,LXU,PA2,PAE2,PXE8,PXU,QA2,QA26,QAA2,QAE2,QAE6,QAW QC2,QDW9,QE,QK4,QKA4,QKB2,QMEO,QNB2,QND,QNE2,QNE6,QNE8,QNE9 QNK,QNR2,QNR6,QSC2,QTR2,QWA2,QWA4,QWC4,QWH2,QWT2,QXB,QXB7,QXB9 QXC4,QXC6,QXC9,QXE4,QXE6,QXE7,QXE8,QXE9,QXEB,QXQ4,QXQ7,QXS4 QXU,SCK4,SHQ4,SM32,SMC1,SMD3,SMEO,SME6,SMX2,SNC,STC4,SWA4,SXB SXB7,SXB9,SXE4,SXE7,SXE8,SXE9,SXEB,SXQ4,SXU,VA2,VAA1,VAA8,VAC2 VAG2,VC2,VCN2,VD2,VDB2,VDE2,VE39,VEP7,VEP9,VK2,VKB2,VKE4,VKE9 VKX4,VKX9,VM2,VMA2,VME2,VMS2,VN17,VN27,VNG1,VNG2,VNS9,VPE4 VPE5,VPE7,VPE9,VPX4,VPX5,VPX7,VPX9,VS39,VS49,VSD,VSD4,VSD7 VSD9,VTH4,VWA2,VWC,VWC7,VWC9,VWE,VWT4,VX39,VX8,VXB,VXB7,VXB9 VXE2,VXE4,VXE6,VXE7,VXE8,VXE9,VXEB,VXG,VXG2,VXP7,VXQ4
	90201-ZE3-790	.....	1	-	-	-	1317977 --------	ED6,EDD2,EDS2,EDS6,EDT6,EN6,ENT2,HA2,HJA2,LKE,LX2,LXE2,LXE4 LXE8,LXQ4,LXU,PA2,PAE2,PXE8,PXU,QA2,QA26,QAA2,QAE2,QAE6,QAW QC2,QDW9,QE,QK4,QKA4,QKB2,QMEO,QNB2,QND,QNE2,QNE6,QNE8,QNE9 QNK,QNR2,QNR6,QSC2,QTR2,QWA2,QWA4,QWC4,QWH2,QWT2,QXB,QXB7,QXB9 QXC4,QXC6,QXC9,QXE4,QXE6,QXE7,QXE8,QXE9,QXEB,QXQ4,QXQ7,QXS4 QXU,SCK4,SHQ4,SM32,SMC1,SMD3,SMEO,SME6,SMX2,SNC,STC4,SWA4,SXB SXB7,SXB9,SXE4,SXE7,SXE8,SXE9,SXEB,SXQ4,SXU,VA2,VAA1,VAA8,VAC2 VAG2,VC2,VCN2,VD2,VDB2,VDE2,VE39,VEP7,VEP9,VK2,VKB2,VKE4,VKE9 VKX4,VKX9,VM2,VMA2,VME2,VMS2,VN17,VN27,VNG1,VNG2,VNS9,VPE4 VPE5,VPE7,VPE9,VPX4,VPX5,VPX7,VPX9,VS39,VS49,VSD,VSD4,VSD7 VSD9,VTH4,VWA2,VWC,VWC7,VWC9,VWE,VWT4,VX39,VX8,VXB,VXB7,VXB9 VXE2,VXE4,VXE6,VXE7,VXE8,VXE9,VXEB,VXG,VXG2,VXP7,VXQ4
			-	1	1	1		
11	90741-ZE2-000	KEY, SPECIAL WOODRUFF, 25X18	1	1	1	1		

IGNITION COIL(1)

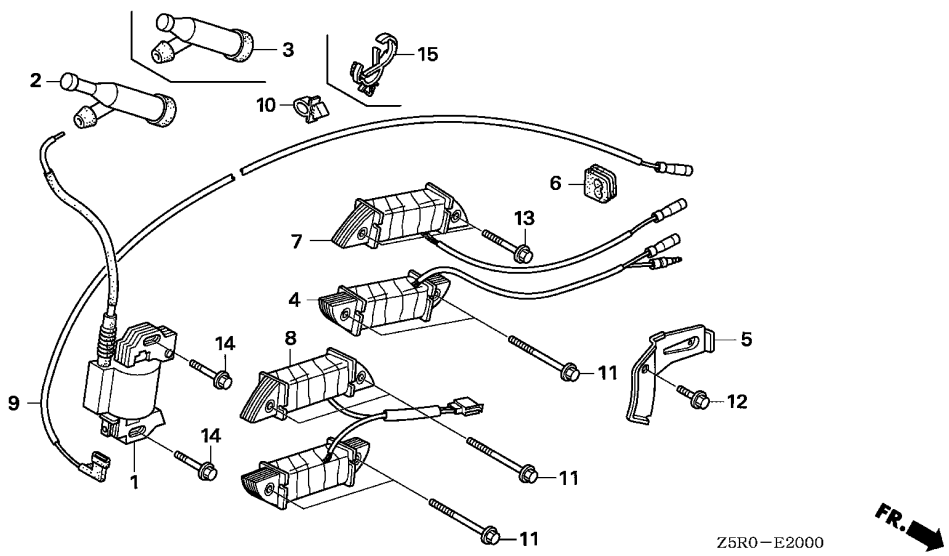

Ref. No.	L.O.N.	(Relative ref. Number) Description	F.R.T.

Ref. No.	Part No.	Description	Reqd. QTY GX 390 U1	GX 390 R1	GX 390 U2	GX 390 R2	Serial No.		Parts catalogue code
1	30500-ZF6-W03	COIL ASSY., IGNITION --------	1	-	-	-	--------	--------	PXU4,QHB4,SM34,SMX4,VC2N
	30500-ZF6-W02	----------	1	-	-	-	--------	1411816	ED6,EDD2,EDS2,EDS6,EDT6,EN6,ENT2,HA2,HJA2,LKE,LX2,LXE2,LXE4 LXE8,LXQ4,LXU,PA2,PAE2,PXE8,PXU,QA2,QA26,QAA2,QAE2,QAE6,QAW QC2,QDW9,QE,QK4,QKA4,QKB2,QMEO,QNB2,QNE2,QNE6,QNE8,QNE9,QNK QSC2,QTR2,QWA2,QWA4,QWC4,QWT2,QXB,QXB7,QXB9,QXC4,QXC6,QXC9 QXE4,QXE6,QXE7,QXE8,QXE9,QXEB,QXH9,QXQ4,QXQ7,QXS4,QXU,SCK4 SHQ4,SM32,SMC1,SMD3,SMEO,SME6,SMX2,SNC,STC4,SWA4,SXB,SXB7,SXB9 SXE4,SXE7,SXE8,SXE9,SXEB,SXQ4,SXU,VA2,VAA1,VAA8,VAC2,VAG2,VC2 VCN2,VD2,VDB2,VDE2,VE39,VEP7,VEP9,VK2,VKB2,VKE4,VKE9,VKX4,VKX9 VM2,VMA2,VME2,VMS2,VN17,VN27,VNG1,VNG2,VNS9,VPE4,VPE5,VPE7 VPE9,VPX4,VPX5,VPX7,VPX9,VS39,VS49,VSD,VSD4,VSD7,VSD9,VTH4 VWA2,VWC,VWC7,VWC9,VWE,VWS,VWT4,VX39,VX8,VXB,VXB7,VXB9,VXE2 VXE4,VXE6,VXE7,VXE8,VXE9,VXEB,VXG,VXG2,VXP7,VXQ4
	30500-ZF6-W03	----------	1	-	-	-	1411817	--------	ED6,EDD2,EDS2,EDS6,EDT6,EN6,ENT2,HA2,HJA2,LKE,LX2,LXE2,LXE4 LXE8,LXQ4,LXU,PA2,PAE2,PXE8,PXU,QA2,QA26,QAA2,QAE2,QAE6,QAW QC2,QDW9,QE,QK4,QKA4,QKB2,QMEO,QNB2,QNE2,QNE6,QNE8,QNE9,QNK QSC2,QTR2,QWA2,QWA4,QWC4,QWT2,QXB,QXB7,QXB9,QXC4,QXC6,QXC9 QXE4,QXE6,QXE7,QXE8,QXE9,QXEB,QXH9,QXQ4,QXQ7,QXS4,QXU,SCK4 SHQ4,SM32,SMC1,SMD3,SMEO,SME6,SMX2,SNC,STC4,SWA4,SXB,SXB7,SXB9 SXE4,SXE7,SXE8,SXE9,SXEB,SXQ4,SXU,VA2,VAA1,VAA8,VAC2,VAG2,VC2 VCN2,VD2,VDB2,VDE2,VE39,VEP7,VEP9,VK2,VKB2,VKE4,VKE9,VKX4,VKX9 VM2,VMA2,VME2,VMS2,VN17,VN27,VNG1,VNG2,VNS9,VPE4,VPE5,VPE7 VPE9,VPX4,VPX5,VPX7,VPX9,VS39,VS49,VSD,VSD4,VSD7,VSD9,VTH4 VWA2,VWC,VWC7,VWC9,VWE,VWS,VWT4,VX39,VX8,VXB,VXB7,VXB9,VXE2 VXE4,VXE6,VXE7,VXE8,VXE9,VXEB,VXG,VXG2,VXP7,VXQ4
			-	1	-	-			

IGNITION COIL(1)

Ref. No.	Part No.	Description	Reqd. QTY GX 390 U1	GX 390 R1	GX 390 U2	GX 390 R2	Serial No.		Parts catalogue code
2	30700-ZE1-013	CAP ASSY., NOISE SUPPRESSOR (NICHIWA Y-EZ RTFM256)	1	1	-	-	--------	--------	ED6,EDD2,EDS2,EDS6,EDT6,EN6,ENT2,HA2,HJA2,LKE,LX2,LXE2,LXE4 LXE8,LXQ4,LXU,PA2,PAE2,PXE8,PXM8,PXU,PXU4,QA2,QA26,QAA2,QAE2 QAE6,QAW,QC2,QDW9,QE,QHB4,QK4,QKA4,QKB2,QMEO,QNB2,QNE2,QNE6 QNE8,QNE9,QNK,QSC2,QTR2,QWA2,QWA4,QWC4,QWT2,QXB,QXB7,QXB9,QXC4 QXC6,QXC9,QXE4,QXE6,QXE7,QXE8,QXE9,QXEB,QXH9,QXQ4,QXQ7,QXS4 QXU,SCK4,SHQ4,SM32,SM34,SMC1,SMD3,SMEO,SME6,SMX2,SMX4,SNC,STC4 SWA4,SXB,SXB7,SXB9,SXE4,SXE7,SXE8,SXE9,SXEB,SXQ4,SXU,VA2,VAA1 VAA8,VAC2,VAG2,VC2,VC2N,VCN2,VD2,VDB2,VDE2,VE39,VEP7,VEP9,VK2 VKB2,VKE4,VKE9,VKX4,VKX9,VM2,VMA2,VME2,VMS2,VN17,VN27,VNG1 VNG2,VNS9,VPE4,VPE5,VPE7,VPE9,VPX4,VPX5,VPX7,VPX9,VS39,VS49 VSD,VSD4,VSD7,VSD9,VWA2,VWC,VWC7,VWC9,VWE,VWS,VWT4,VX39,VX8 VXB,VXB7,VXB9,VXE2,VXE4,VXE6,VXE7,VXE8,VXE9,VXEB,VXG,VXG2,VXP7 VXQ4
3	30700-ZF5-013	CAP ASSY., NOISE SUPPRESSOR	1	1	-	-	--------	--------	VTH4
4	31510-ZE1-811	COIL ASSY., LAMP(12V/25W)	1	1	-	-	--------	--------	ED6,EN6,VM2,VMA2
	31510-ZE3-003		1	1	-	-	--------	--------	EDD2,ENT2,SMC1,VME2,VMS2
5	31511-ZE3-000	CLAMPER, CORD	1	1	-	-	--------	--------	ED6,EDD2,EDS2,EDS6,EN6,ENT2,HJA2,LKE,LXE2,LXE4,LXE8,PAE2,PXE8 PXM8,QAE2,QAE6,QC2,QKA4,QKB2,QMEO,QNB2,QNE2,QNE6,QNE8,QNE9,QNK QSC2,QTR2,QWA2,QWC4,QXE4,QXE6,QXE7,QXE8,QXE9,QXEB,QXH9,SCK4 SM32,SM34,SMC1,SMEO,SME6,STC4,SXE4,SXE7,SXE8,SXE9,SXEB,VAA8 VC2,VC2N,VCN2,VDB2,VDE2,VE39,VEP7,VEP9,VK2,VKB2,VKE4,VKE9,VM2 VMA2,VME2,VMS2,VN27,VNG2,VNS9,VPE4,VPE5,VPE7,VPE9,VS49,VSD4 VTH4,VWA2,VWE,VXE2,VXE4,VXE6,VXE7,VXE8,VXE9,VXEB
6	31512-ZE2-000	GROMMET, CORD	1	1	-	-	--------	--------	ED6,EDD2,EDS2,EDS6,EDT6,EN6,ENT2,HA2,HJA2,LKE,LX2,LXE2,LXE4 LXE8,LXQ4,LXU,PA2,PAE2,PXE8,PXM8,PXU,PXU4,QA2,QA26,QAA2,QAE2 QAE6,QAW,QC2,QDW9,QE,QHB4,QK4,QKA4,QKB2,QMEO,QNB2,QNE2,QNE6 QNE8,QNE9,QNK,QSC2,QTR2,QWA2,QWA4,QWC4,QWT2,QXB,QXB7,QXB9,QXC4 QXC6,QXC9,QXE4,QXE6,QXE7,QXE8,QXE9,QXEB,QXH9,QXQ4,QXQ7,QXS4 QXU,SCK4,SHQ4,SM32,SM34,SMC1,SMD3,SMEO,SME6,SMX2,SMX4,SNC,STC4 SWA4,SXB,SXB7,SXB9,SXE4,SXE7,SXE8,SXE9,SXEB,SXQ4,SXU,VA2,VAA1 VAA8,VAC2,VAG2,VC2,VC2N,VCN2,VD2,VDB2,VDE2,VE39,VEP7,VEP9,VK2 VKB2,VKE4,VKE9,VKX4,VKX9,VM2,VMA2,VME2,VMS2,VN17,VN27,VNG1 VNG2,VNS9,VPE4,VPE5,VPE7,VPE9,VPX4,VPX5,VPX7,VPX9,VS39,VS49 VSD,VSD4,VSD7,VSD9,VTH4,VWA2,VWC,VWC7,VWC9,VWE,VWS,VWT4,VX39 VX8,VXB,VXB7,VXB9,VXE2,VXE4,VXE6,VXE7,VXE8,VXE9,VXEB,VXG,VXG2 VXP7,VXQ4
7	31630-ZF5-801	COIL ASSY., CHARGE(1A)	1	1	-	-	--------	--------	EDD2,ENT2
	31630-ZE1-013		1	-	-	-	--------	--------	VC2N
	31630-ZE2-841	COIL ASSY., CHARGE(3A)	1	-	-	-	--------	1398310	PAE2,QAE2,QAE6,QC2,QKB2,VDB2,VEP9,VK2,VKE4,VKE9,VN27,VNG2,VNS9
	31630-ZE1-003	COIL ASSY., CHARGE(1A)	1	-	-	-	--------	1426137	EDS2,EDS6,LXE2,LXE4,LXE8,PXE8,QXE4,QXE6,QXE7,QXE8,QXE9,QXEB SXE4,SXE7,SXE8,SXE9,SXEB,VAA8,VC2,VCN2,VDE2,VE39,VEP7,VKB2 VME2,VMS2,VPE4,VPE5,VPE7,VPE9,VS49,VSD4,VWA2,VWE,VXE2,VXE4 VXE6,VXE7,VXE8,VXE9,VXEB
	31630-ZE2-842	COIL ASSY., CHARGE(3A)	1	-	-	-	1398311	--------	PAE2,QAE2,QAE6,QC2,QKB2,VDB2,VEP9,VK2,VKE4,VKE9,VN27,VNG2,VNS9
	31630-ZE1-013	COIL ASSY., CHARGE(1A)	1	-	-	-	1426138	--------	EDS2,EDS6,LXE2,LXE4,LXE8,PXE8,QXE4,QXE6,QXE7,QXE8,QXE9,QXEB SXE4,SXE7,SXE8,SXE9,SXEB,VAA8,VC2,VCN2,VDE2,VE39,VEP7,VKB2 VME2,VMS2,VPE4,VPE5,VPE7,VPE9,VS49,VSD4,VWA2,VWE,VXE2,VXE4 VXE6,VXE7,VXE8,VXE9,VXEB
			-	1	-	-	--------	--------	EDS2,EDS6,PXM8,VAA8,VC2,VCN2,VDE2,VKB2,VPE4,VPE5,VPE7,VPE9 VS49,VSD4,VWE
	31630-ZE2-842	COIL ASSY., CHARGE(3A)	-	1	-	-	--------	--------	QKB2,VDB2,VEP9,VK2,VKE4,VNS9
8	31630-ZE2-861	COIL ASSY., CHARGE(10A)	1	1	-	-	--------	--------	HJA2,LKE,QKA4,QMEO,QNB2,QNE2,QNE6,QNE8,QNE9,QNK,QSC2,QTR2,QWA2 QWC4,QXH9,SCK4,SM32,SM34,SMEO,SME6,STC4,VTH4
9	36101-ZE3-800	CORD, STOP SWITCH(470MM)	1	1	-	-	--------	--------	ED6,EDD2,EDS2,EDS6,EDT6,EN6,ENT2,VWC,VWE,VWS

IGNITION COIL(1)

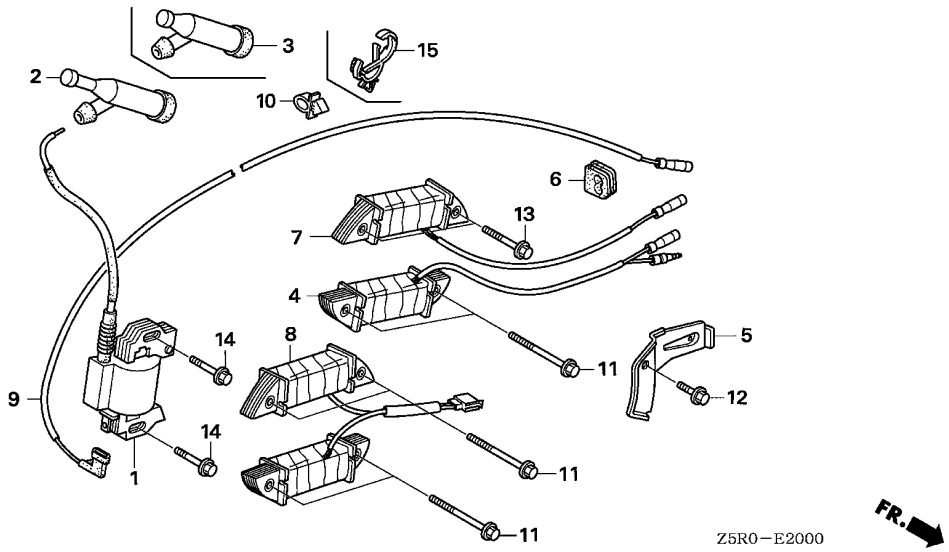

Ref. No.	Part No.	Description	Reqd. QTY GX 390 U1	GX 390 R1	GX 390 U2	GX 390 R2	Serial No.		Parts catalogue code
(9)	36101-ZE2-701	CORD, STOP SWITCH(430MM) ····	1	1	-	-	--------	--------	HA2,HJA2,LKE,LX2,LXE2,LXE4,LXE8,LXQ4,LXU,PA2,PAE2,PXE8,PXM8 PXU,PXU4,QA2,QA26,QAA2,QAE2,QAE6,QAW,QC2,QDW9,QE,QHB4,QK4,QKA4 QKB2,QME0,QNB2,QNE2,QNE6,QNE8,QNE9,QNK,QSC2,QTR2,QWA2,QWA4 QWC4,QWT2,QXB,QXB7,QXB9,QXC4,QXC6,QXC9,QXE4,QXE6,QXE7,QXE8 QXE9,QXEB,QXH9,QXQ4,QXQ7,QXS4,QXU,SCK4,SHQ4,SM32,SM34,SMC1 SMD3,SME0,SME6,SMX2,SMX4,SNC,STC4,SWA4,SXB,SXB7,SXB9,SXE4,SXE7 SXE8,SXE9,SXEB,SXQ4,SXU,VA2,VAA1,VAA8,VAC2,VAG2,VC2,VC2N,VCN2 VD2,VDB2,VDE2,VE39,VEP7,VEP9,VK2,VKB2,VKE4,VKE9,VKX4,VKX9,VM2 VMA2,VME2,VMS2,VN17,VN27,VNG1,VNG2,VNS9,VPE4,VPE5,VPE7,VPE9 VPX4,VPX5,VPX7,VPX9,VS39,VS49,VSD,VSD4,VSD7,VSD9,VTH4,VWA2 VWC7,VWC9,VWT4,VX39,VX8,VXB,VXB7,VXB9,VXE2,VXE4,VXE6,VXE7,VXE8 VXE9,VXEB,VXG,VXG2,VXP7,VXQ4
10	36103-ZE1-000	HOLDER, STOP SWITCH CORD ····	1	1	-	-	--------	--------	LKE,LXE2,LXE4,LXE8,PAE2,PXE8,PXM8,QAE2,QAE6,QE,QHB4,QKA4,QME0 QNE2,QNE6,QNE8,QNE9,QNK,QSC2,QXE4,QXE6,QXE7,QXE8,QXE9,QXEB QXH9,SCK4,SHQ4,SM32,SM34,SMC1,SME0,STC4,SXE4,SXE7,SXE8,SXE9 SXEB,VAA8,VC2,VC2N,VDE2,VEP7,VK2,VKB2,VME2,VMS2,VN27,VNG2,VNS9 VWS,VXE2,VXE4,VXE6,VXE7,VXE8,VXE9,VXEB
11	90012-888-000	BOLT, FLANGE, 6X40(CT200) ···	2	2	-	-	--------	--------	ED6,EDD2,EN6,ENT2,SMC1,VM2,VMA2,VME2,VMS2
			4	-	-	-	--------	--------	HJA2,LKE,QKA4,QME0,QNB2,QNE2,QNE6,QNE8,QNE9,QNK,QSC2,QTR2,QWA2 QWC4,QXH9,SCK4,SM32,SM34,SME0,SME6,STC4,VTH4
			-	4	-	-	--------	--------	QNB2,QWA2,VTH4
12	90013-883-000	BOLT, FLANGE, 6X12(CT200) ···	1	1	-	-	--------	--------	ED6,EDD2,EDS2,EDS6,EN6,ENT2,HJA2,LKE,LXE2,LXE4,LXE8,PAE2,PXE8 PXM8,QAE2,QAE6,QC2,QKA4,QKB2,QME0,QNB2,QNE2,QNE6,QNE8,QNE9,QNK QSC2,QTR2,QWA2,QWC4,QXE4,QXE6,QXE7,QXE8,QXE9,QXEB,QXH9,SCK4 SM32,SM34,SMC1,SME0,SME6,STC4,SXE4,SXE7,SXE8,SXE9,SXEB,VAA8 VC2,VC2N,VCN2,VDB2,VDE2,VE39,VEP7,VEP9,VK2,VKB2,VKE4,VKE9,VM2 VMA2,VME2,VMS2,VN27,VNG2,VNS9,VPE4,VPE5,VPE7,VPE9,VS49,VSD4 VTH4,VWA2,VWE,VXE2,VXE4,VXE6,VXE7,VXE8,VXE9,VXEB

IGNITION COIL(1)

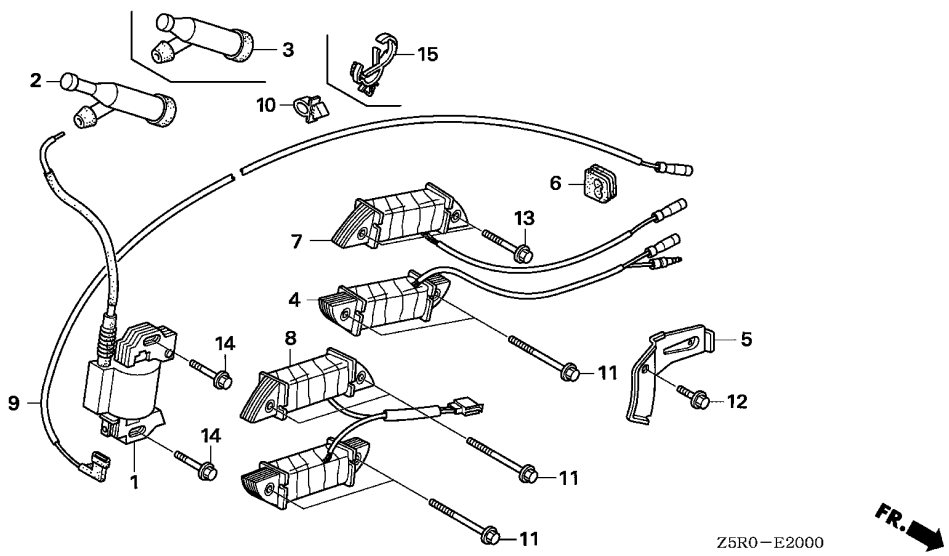

Ref. No.	Part No.	Description	Reqd. QTY GX 390 U1	GX 390 R1	GX 390 U2	GX 390 R2	Serial No.		Parts catalogue code
13	90014-ZE6-000	BOLT, FLANGE, 6X35(CT200) ···	2	2	-	-	--------	--------	EDD2,EDS2,EDS6,ENT2,LXE2,LXE4,LXE8,PXE8,PXM8,QXE4,QXE6,QXE7 QXE8,QXE9,QXEB,SXE4,SXE7,SXE8,SXE9,SXEB,VAA8,VC2,VC2N,VCN2 VDE2,VE39,VEP7,VKB2,VME2,VMS2,VPE4,VPE5,VPE7,VPE9,VS49,VSD4 VWA2,VWE,VXE2,VXE4,VXE6,VXE7,VXE8,VXE9,VXEB
	90012-888-000	BOLT, FLANGE, 6X40(CT200) ···	2	2	-	-	--------	--------	PAE2,QAE2,QAE6,QC2,QKB2,VDB2,VEP9,VK2,VKE4,VKE9,VN27,VNG2,VNS9
14	90015-883-000	BOLT, FLANGE, 6X28(CT200) ···	2	2	-	-	--------	--------	ED6,EDD2,EDS2,EDS6,EDT6,EN6,ENT2,HA2,HJA2,LKE,LX2,LXE2,LXE4 LXE8,LXQ4,LXU,PA2,PAE2,PXE8,PXM8,PXU,PXU4,QA2,QA26,QAA2,QAE2 QAE6,QAW,QC2,QDW9,QE,QHB4,QK4,QKA4,QKB2,QMEO,QNB2,QNE2,QNE6 QNE8,QNE9,QNK,QSC2,QTR2,QWA2,QWA4,QWC4,QWT2,QXB,QXB7,QXB9,QXC4 QXC6,QXC9,QXE4,QXE6,QXE7,QXE8,QXE9,QXEB,QXH9,QXQ4,QXQ7,QXS4 QXU,SCK4,SHQ4,SM32,SM34,SMC1,SMD3,SMEO,SME6,SMX2,SMX4,SNC,STC4 SWA4,SXB,SXB7,SXB9,SXE4,SXE7,SXE8,SXE9,SXEB,SXQ4,SXU,VA2,VAA1 VAA8,VAC2,VAG2,VC2,VC2N,VCN2,VD2,VDB2,VDE2,VE39,VEP7,VEP9,VK2 VKB2,VKE4,VKE9,VKX4,VKX9,VM2,VMA2,VME2,VMS2,VN17,VN27,VNG1 VNG2,VNS9,VPE4,VPE5,VPE7,VPE9,VPX4,VPX5,VPX7,VPX9,VS39,VS49 VSD,VSD4,VSD7,VSD9,VTH4,VWA2,VWC,VWC7,VWC9,VWE,VWS,VWT4,VX39 VX8,VXB,VXB7,VXB9,VXE2,VXE4,VXE6,VXE7,VXE8,VXE9,VXEB,VXG,VXG2 VXP7,VXQ4
15	90684-ZA0-601	CLIP, HARNESS ·····	1	1	-	-	--------	--------	ED6,EDT6,EN6,HA2,HJA2,LX2,LXQ4,LXU,PA2,PXU,PXU4,QA2,QA26,QAA2 QAW,QDW9,QK4,QWA2,QWA4,QWC4,QWT2,QXB,QXB7,QXB9,QXC4,QXC6,QXC9 QXQ4,QXQ7,QXS4,QXU,SMD3,SME6,SMX2,SMX4,SNC,SWA4,SXB,SXB7,SXB9 SXQ4,SXU,VA2,VAA1,VAC2,VAG2,VD2,VDB2,VEP9,VKX4,VKX9,VM2,VMA2 VN17,VNG1,VPX4,VPX5,VPX7,VPX9,VS39,VSD,VSD7,VSD9,VWC,VWC7,VWC9 VX39,VX8,VXB,VXB7,VXB9,VXG,VXG2,VXP7,VXQ4

E-20-1 IGNITION COIL(2)

J 5

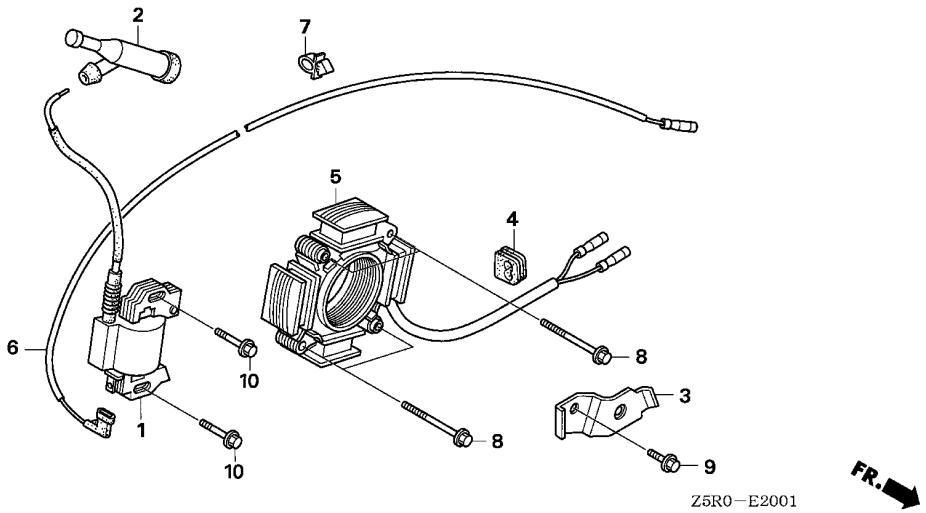

Ref. No.	L.O.N.	(Relative ref. Number) Description	F.R.T.

Ref. No.	Part No.	Description	Reqd. QTY GX 390 U1	GX 390 R1	GX 390 U2	GX 390 R2	Serial No.		Parts catalogue code
1	30500-ZF6-W02	COIL ASSY., IGNITION ·····	1	-	-	-	--------	1411816	QND,QNR2,QNR6,QWH2
	30500-ZF6-W03	·····	1	-	-	-	1411817	--------	QND,QNR2,QNR6,QWH2
2	30700-ZE1-013	CAP ASSY., NOISE SUPPRESSOR (NICHIWA Y-EZ RTFM256)	1	-	-	-	--------	--------	QND,QNR2,QNR6,QWH2
3	31511-ZE2-W00	CLAMPER, CORD ·····	1	-	-	-	--------	--------	QND,QNR2,QNR6,QWH2
4	31512-ZE2-000	GROMMET, CORD ·····	1	-	-	-	--------	--------	QND,QNR2,QNR6,QWH2
5	31630-ZE2-W01	COIL ASSY., CHARGE(12V/18A) ·	1	-	-	-	--------	--------	QND,QNR2,QNR6,QWH2
6	36101-ZE2-701	CORD, STOP SWITCH(430MM) ····	1	-	-	-	--------	--------	QND,QNR2,QNR6,QWH2
7	36103-ZE1-000	HOLDER, STOP SWITCH CORD ····	1	-	-	-	--------	--------	QND,QNR2,QNR6,QWH2
8	90012-888-000	BOLT, FLANGE, 6X40(CT200) ···	4	-	-	-	--------	--------	QND,QNR2,QNR6,QWH2
9	90013-883-000	BOLT, FLANGE, 6X12(CT200) ···	1	-	-	-	--------	--------	QND,QNR2,QNR6,QWH2
10	90015-883-000	BOLT, FLANGE, 6X28(CT200) ···	2	-	-	-	--------	--------	QND,QNR2,QNR6,QWH2

IGNITION COIL(3)

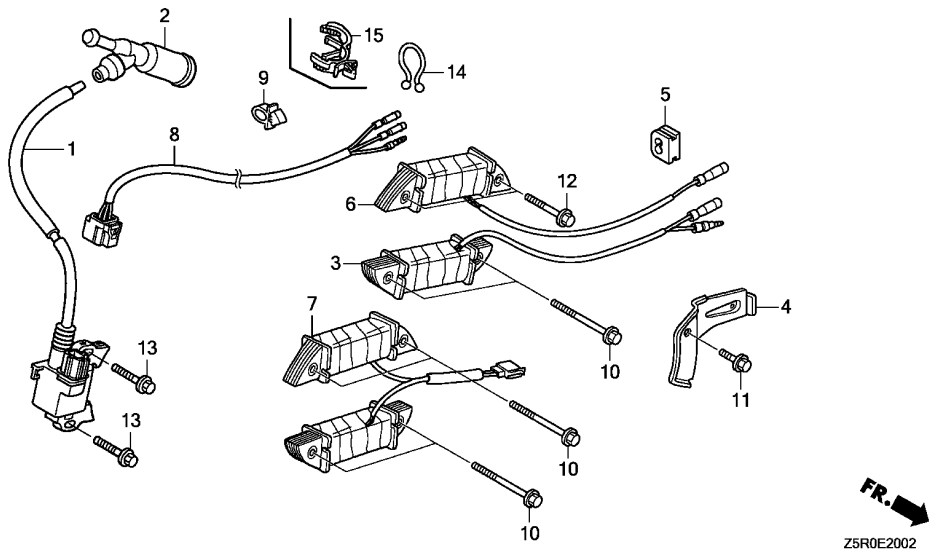

Ref. No.	L.O.N.	(Relative ref. Number) Description	F.R.T.

Ref. No.	Part No.	Description	Reqd. QTY GX 390 U1	GX 390 R1	GX 390 U2	GX 390 R2	Serial No.	Parts catalogue code
1	30500-Z5R-003	COIL ASSY., IGNITION ·····	-	-	1	1		
2	30700-ZE1-013	CAP ASSY., NOISE SUPPRESSOR (NICHIWA Y-EZ RTFM256)	-	-	1	1		
3	31510-ZE1-811	COIL ASSY., LAMP(12V/25W) ···	-	-	-	1	-------- --------	ED6,EN6
	31510-ZE3-003	·····	-	-	-	1	-------- --------	EDD2,ENT2
4	31511-ZE3-000	CLAMPER, CORD ·····	-	-	1	1	-------- --------	ED6,EDD2,EDS6,EN6,ENT2,PXE8,PXM8,QXE8,SM32,SM34,SXE4
5	31512-ZE2-000	GROMMET, CORD ·····	-	-	1	1		
6	31630-ZE1-013	COIL ASSY., CHARGE(1A) ·····	-	-	1	1	-------- --------	EDS6,PXE8,PXM8,QXE8,SXE4
	31630-ZF5-801	·····	-	-	-	1	-------- --------	EDD2,ENT2
7	31630-ZE2-861	COIL ASSY., CHARGE(10A) ·····	-	-	1	-	-------- --------	SM32,SM34
8	32110-Z5T-810	HARNESS ASSY., ENGINE WIRE (SEL)	-	-	1	1	-------- --------	EDS6,PXE8,PXM8,QXE8,SM32,SM34,SXE4
	32110-Z5T-000	HARNESS ASSY., ENGINE WIRE ··	-	-	1	1	-------- --------	EDT6,PXU,PXU4,QXU,SMX2
9	36103-ZE1-000	HOLDER, STOP SWITCH CORD ····	-	-	-	1	-------- --------	VWS
10	90012-888-000	BOLT, FLANGE, 6X40(CT200) ···	-	-	4	2	-------- --------	ED6,EDD2,EN6,ENT2,SM32,SM34
11	90013-883-000	BOLT, FLANGE, 6X12(CT200) ···	-	-	1	1	-------- --------	ED6,EDD2,EDS6,EN6,ENT2,PXE8,PXM8,QXE8,SM32,SM34,SXE4
12	90014-ZE6-000	BOLT, FLANGE, 6X35(CT200) ···	-	-	2	2	-------- --------	EDD2,EDS6,ENT2,PXE8,PXM8,QXE8,SXE4
13	90015-883-000	BOLT, FLANGE, 6X28(CT200) ···	-	-	2	2		
14	90630-751-000	CLIP, PURSE LOCK ·····	-	-	1	1	-------- --------	EDS6,PXE8,PXM8,QXE8,SM32,SM34,SXE4
15	90684-ZA0-601	CLIP, HARNESS ·····	-	-	1	1	-------- --------	ED6,EDS6,EDT6,EN6,PXU,PXU4,QXU,SMX2

STARTER MOTOR

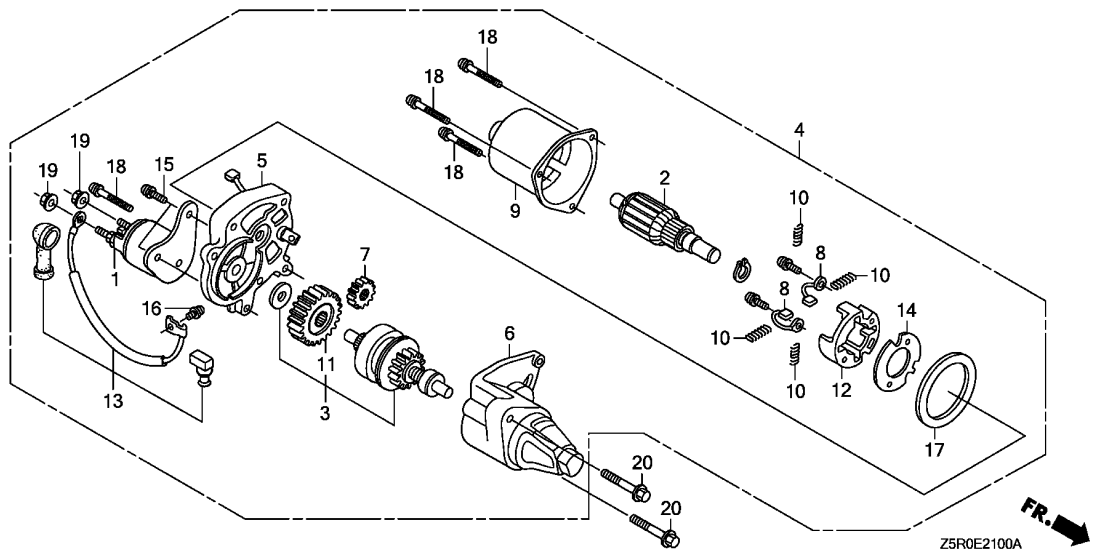

Ref. No.	L.O.N.	(Relative ref. Number) Description	F.R.T.

Ref. No.	Part No.	Description	Reqd. QTY GX 390 U1	GX 390 R1	GX 390 U2	GX 390 R2	Serial No.		Parts catalogue code
1	31204-ZA0-003	CONTACTOR ASSY. ----------	1	1	1	1	--------	--------	EDD2,EDS2,EDS6,ENT2,LKE,LXE2,LXE4,LXE8,PAE2,PXE8,PXM8,QAE2 QAE6,QC2,QKA4,QKB2,QMEO,QNB2,QND,QNE2,QNE6,QNE8,QNE9,QNK,QNR2 QNR6,QSC2,QTR2,QWH2,QXE4,QXE6,QXE7,QXE8,QXE9,QXEB,QXH9,SCK4 SM32,SM34,SMEO,STC4,SXE4,SXE7,SXE8,SXE9,SXEB,VAA8,VC2,VC2N VCN2,VDB2,VDE2,VE39,VEP7,VK2,VKB2,VKE4,VKE9,VME2,VMS2,VN27 VNG2,VNS9,VPE4,VPE5,VPE7,VPE9,VS49,VSD4,VTH4,VWA2,VWE,VWT4 VXE2,VXE4,VXE6,VXE7,VXE8,VXE9,VXEB
2	31206-ZE3-003	ARMATURE COMP. ----------	1	1	1	1	--------	--------	EDD2,EDS2,EDS6,ENT2,LKE,LXE2,LXE4,LXE8,PAE2,PXE8,PXM8,QAE2 QAE6,QC2,QKA4,QKB2,QMEO,QNB2,QND,QNE2,QNE6,QNE8,QNE9,QNK,QNR2 QNR6,QSC2,QTR2,QWH2,QXE4,QXE6,QXE7,QXE8,QXE9,QXEB,QXH9,SCK4 SM32,SM34,SMEO,STC4,SXE4,SXE7,SXE8,SXE9,SXEB,VAA8,VC2,VC2N VCN2,VDB2,VDE2,VE39,VEP7,VK2,VKB2,VKE4,VKE9,VME2,VMS2,VN27 VNG2,VNS9,VPE4,VPE5,VPE7,VPE9,VS49,VSD4,VTH4,VWA2,VWE,VWT4 VXE2,VXE4,VXE6,VXE7,VXE8,VXE9,VXEB
3	31207-ZE3-003	CLUTCH COMP., OVERRUNNING ---	1	1	1	1	--------	--------	EDD2,EDS2,EDS6,ENT2,LKE,LXE2,LXE4,LXE8,PAE2,PXE8,PXM8,QAE2 QAE6,QC2,QKA4,QKB2,QMEO,QNB2,QND,QNE2,QNE6,QNE8,QNE9,QNK,QNR2 QNR6,QSC2,QTR2,QWH2,QXE4,QXE6,QXE7,QXE8,QXE9,QXEB,QXH9,SCK4 SM32,SM34,SMEO,STC4,SXE4,SXE7,SXE8,SXE9,SXEB,VAA8,VC2,VC2N VCN2,VDB2,VDE2,VE39,VEP7,VK2,VKB2,VKE4,VKE9,VME2,VMS2,VN27 VNG2,VNS9,VPE4,VPE5,VPE7,VPE9,VS49,VSD4,VTH4,VWA2,VWE,VWT4 VXE2,VXE4,VXE6,VXE7,VXE8,VXE9,VXEB
4	31210-ZE3-013	MOTOR UNIT, STARTER ---------	1	-	-	-	--------	--------	LXE8,QNE9,QTR2,QXEB,SXE7,SXE8,SXE9,SXEB,VE39,VEP7,VKE9,VME2 VMS2,VNG2,VWA2,VXE8,VXEB
	31210-ZE3-023	----------	1	-	-	-	--------	--------	SM34,VC2N
	31210-ZE3-013	----------	1	-	-	-	--------	1414795	EDD2,EDS2,EDS6,ENT2,LKE,LXE2,LXE4,PAE2,PXE8,QAE2,QAE6,QC2,QKA4 QKB2,QMEO,QNB2,QND,QNE2,QNE6,QNE8,QNK,QNR2,QNR6,QSC2,QWH2,QXE4 QXE6,QXE7,QXE8,QXE9,QXH9,SCK4,SM32,SMEO,STC4,SXE4,VAA8,VC2 VCN2,VDB2,VDE2,VK2,VKB2,VKE4,VN27,VNS9,VPE4,VPE5,VPE7,VPE9 VS49,VSD4,VTH4,VWE,VWT4,VXE2,VXE4,VXE6,VXE7,VXE9

Ref. No.	Part No.	Description	Reqd. QTY GX 390 U1	GX 390 R1	GX 390 U2	GX 390 R2	Serial No.	Parts catalogue code
(4)	31210-ZE3-023	MOTOR UNIT, STARTER ·····	1	-	-	-	1414796 --------	EDD2,EDS2,EDS6,ENT2,LKE,LXE2,LXE4,PAE2,PXE8,QAE2,QAE6,QC2,QKA4 QKB2,QMEO,QNB2,QND,QNE2,QNE6,QNE8,QNK,QNR2,QNR6,QSC2,QWH2,QXE4 QXE6,QXE7,QXE8,QXE9,QXH9,SCK4,SM32,SMEO,STC4,SXE4,VAA8,VC2 VCN2,VDB2,VDE2,VK2,VKB2,VKE4,VN27,VNS9,VPE4,VPE5,VPE7,VPE9 VS49,VSD4,VTH4,VWE,VWT4,VXE2,VXE4,VXE6,VXE7,VXE9
			-	1	1	1	-------- --------	EDD2,EDS2,EDS6,ENT2,PXE8,PXM8,QKB2,QNB2,QXE8,SM32,SM34,SXE4 VAA8,VC2,VCN2,VDB2,VDE2,VK2,VKB2,VKE4,VNS9,VPE4,VPE5,VPE7,VPE9 VS49,VSD4,VTH4,VWE,VWT4
5	31211-ZE2-003	BRACKET, CENTER ·····	1	1	1	1	-------- --------	EDD2,EDS2,EDS6,ENT2,LKE,LXE2,LXE4,LXE8,PAE2,PXE8,PXM8,QAE2 QAE6,QC2,QKA4,QKB2,QMEO,QNB2,QND,QNE2,QNE6,QNE8,QNE9,QNK,QNR2 QNR6,QSC2,QTR2,QWH2,QXE4,QXE6,QXE7,QXE8,QXE9,QXEB,QXH9,SCK4 SM32,SM34,SMEO,STC4,SXE4,SXE7,SXE8,SXE9,SXEB,VAA8,VC2,VC2N VCN2,VDB2,VDE2,VE39,VEP7,VK2,VKB2,VKE4,VKE9,VME2,VMS2,VN27 VNG2,VNS9,VPE4,VPE5,VPE7,VPE9,VS49,VSD4,VTH4,VWA2,VWE,VWT4 VXE2,VXE4,VXE6,VXE7,VXE8,VXE9,VXEB
6	31212-ZE3-003	BRACKET, FR. ·····	1	1	1	1	-------- --------	EDD2,EDS2,EDS6,ENT2,LKE,LXE2,LXE4,LXE8,PAE2,PXE8,PXM8,QAE2 QAE6,QC2,QKA4,QKB2,QMEO,QNB2,QND,QNE2,QNE6,QNE8,QNE9,QNK,QNR2 QNR6,QSC2,QTR2,QWH2,QXE4,QXE6,QXE7,QXE8,QXE9,QXEB,QXH9,SCK4 SM32,SM34,SMEO,STC4,SXE4,SXE7,SXE8,SXE9,SXEB,VAA8,VC2,VC2N VCN2,VDB2,VDE2,VE39,VEP7,VK2,VKB2,VKE4,VKE9,VME2,VMS2,VN27 VNG2,VNS9,VPE4,VPE5,VPE7,VPE9,VS49,VSD4,VTH4,VWA2,VWE,VWT4 VXE2,VXE4,VXE6,VXE7,VXE8,VXE9,VXEB
7	31213-ZE2-003	GEAR, DRIVE PINION ·····	1	1	1	1	-------- --------	EDD2,EDS2,EDS6,ENT2,LKE,LXE2,LXE4,LXE8,PAE2,PXE8,PXM8,QAE2 QAE6,QC2,QKA4,QKB2,QMEO,QNB2,QND,QNE2,QNE6,QNE8,QNE9,QNK,QNR2 QNR6,QSC2,QTR2,QWH2,QXE4,QXE6,QXE7,QXE8,QXE9,QXEB,QXH9,SCK4 SM32,SM34,SMEO,STC4,SXE4,SXE7,SXE8,SXE9,SXEB,VAA8,VC2,VC2N VCN2,VDB2,VDE2,VE39,VEP7,VK2,VKB2,VKE4,VKE9,VME2,VMS2,VN27 VNG2,VNS9,VPE4,VPE5,VPE7,VPE9,VS49,VSD4,VTH4,VWA2,VWE,VWT4 VXE2,VXE4,VXE6,VXE7,VXE8,VXE9,VXEB
8	31215-ZE2-003	BRUSH ·····	2	2	2	2	-------- --------	EDD2,EDS2,EDS6,ENT2,LKE,LXE2,LXE4,LXE8,PAE2,PXE8,PXM8,QAE2 QAE6,QC2,QKA4,QKB2,QMEO,QNB2,QND,QNE2,QNE6,QNE8,QNE9,QNK,QNR2 QNR6,QSC2,QTR2,QWH2,QXE4,QXE6,QXE7,QXE8,QXE9,QXEB,QXH9,SCK4 SM32,SM34,SMEO,STC4,SXE4,SXE7,SXE8,SXE9,SXEB,VAA8,VC2,VC2N VCN2,VDB2,VDE2,VE39,VEP7,VK2,VKB2,VKE4,VKE9,VME2,VMS2,VN27 VNG2,VNS9,VPE4,VPE5,VPE7,VPE9,VS49,VSD4,VTH4,VWA2,VWE,VWT4 VXE2,VXE4,VXE6,VXE7,VXE8,VXE9,VXEB
9	31218-ZE3-003	YOKE COMP. ·····	1	1	1	1	-------- --------	EDD2,EDS2,EDS6,ENT2,LKE,LXE2,LXE4,LXE8,PAE2,PXE8,PXM8,QAE2 QAE6,QC2,QKA4,QKB2,QMEO,QNB2,QND,QNE2,QNE6,QNE8,QNE9,QNK,QNR2 QNR6,QSC2,QTR2,QWH2,QXE4,QXE6,QXE7,QXE8,QXE9,QXEB,QXH9,SCK4 SM32,SM34,SMEO,STC4,SXE4,SXE7,SXE8,SXE9,SXEB,VAA8,VC2,VC2N VCN2,VDB2,VDE2,VE39,VEP7,VK2,VKB2,VKE4,VKE9,VME2,VMS2,VN27 VNG2,VNS9,VPE4,VPE5,VPE7,VPE9,VS49,VSD4,VTH4,VWA2,VWE,VWT4 VXE2,VXE4,VXE6,VXE7,VXE8,VXE9,VXEB
10	31219-ZE2-003	SPRING, BRUSH RETURN ·····	4	4	4	4	-------- --------	EDD2,EDS2,EDS6,ENT2,LKE,LXE2,LXE4,LXE8,PAE2,PXE8,PXM8,QAE2 QAE6,QC2,QKA4,QKB2,QMEO,QNB2,QND,QNE2,QNE6,QNE8,QNE9,QNK,QNR2 QNR6,QSC2,QTR2,QWH2,QXE4,QXE6,QXE7,QXE8,QXE9,QXEB,QXH9,SCK4 SM32,SM34,SMEO,STC4,SXE4,SXE7,SXE8,SXE9,SXEB,VAA8,VC2,VC2N VCN2,VDB2,VDE2,VE39,VEP7,VK2,VKB2,VKE4,VKE9,VME2,VMS2,VN27 VNG2,VNS9,VPE4,VPE5,VPE7,VPE9,VS49,VSD4,VTH4,VWA2,VWE,VWT4 VXE2,VXE4,VXE6,VXE7,VXE8,VXE9,VXEB

STARTER MOTOR

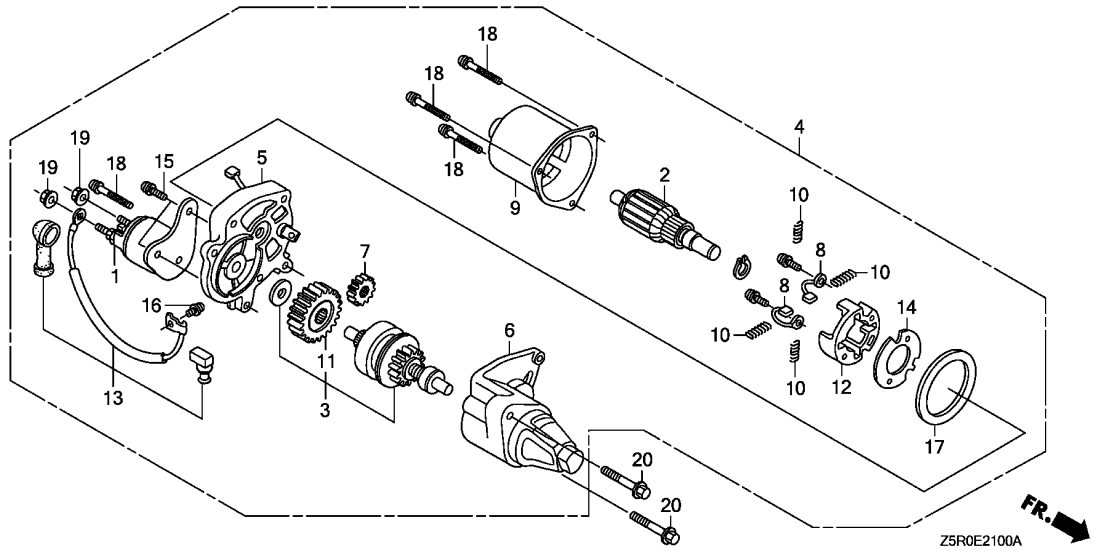

Ref. No.	Part No.	Description	Reqd. QTY GX 390 U1	GX 390 R1	GX 390 U2	GX 390 R2	Serial No.	Parts catalogue code
11	31222-ZE3-791	GEAR, REDUCTION	1	1	1	1	-------- --------	EDD2,EDS2,EDS6,ENT2,LKE,LXE2,LXE4,LXE8,PAE2,PXE8,PXM8,QAE2 QAE6,QC2,QKA4,QKB2,QMEO,QNB2,QND,QNE2,QNE6,QNE8,QNE9,QNK,QNR2 QNR6,QSC2,QTR2,QWH2,QXE4,QXE6,QXE7,QXE8,QXE9,QXEB,QXH9,SCK4 SM32,SM34,SMEO,STC4,SXE4,SXE7,SXE8,SXE9,SXEB,VAA8,VC2,VC2N VCN2,VDB2,VDE2,VE39,VEP7,VK2,VKB2,VKE4,VKE9,VME2,VMS2,VN27 VNG2,VNS9,VPE4,VPE5,VPE7,VPE9,VS49,VSD4,VTH4,VWA2,VWE,VWT4 VXE2,VXE4,VXE6,VXE7,VXE8,VXE9,VXEB
12	31231-ZE2-003	HOLDER, BRUSH	1	1	1	1	-------- --------	EDD2,EDS2,EDS6,ENT2,LKE,LXE2,LXE4,LXE8,PAE2,PXE8,PXM8,QAE2 QAE6,QC2,QKA4,QKB2,QMEO,QNB2,QND,QNE2,QNE6,QNE8,QNE9,QNK,QNR2 QNR6,QSC2,QTR2,QWH2,QXE4,QXE6,QXE7,QXE8,QXE9,QXEB,QXH9,SCK4 SM32,SM34,SMEO,STC4,SXE4,SXE7,SXE8,SXE9,SXEB,VAA8,VC2,VC2N VCN2,VDB2,VDE2,VE39,VEP7,VK2,VKB2,VKE4,VKE9,VME2,VMS2,VN27 VNG2,VNS9,VPE4,VPE5,VPE7,VPE9,VS49,VSD4,VTH4,VWA2,VWE,VWT4 VXE2,VXE4,VXE6,VXE7,VXE8,VXE9,VXEB
13	31232-ZE3-003	WIRE, WATER COVER	1	1	1	1	-------- --------	EDD2,EDS2,EDS6,ENT2,LKE,LXE2,LXE4,LXE8,PAE2,PXE8,PXM8,QAE2 QAE6,QC2,QKA4,QKB2,QMEO,QNB2,QND,QNE2,QNE6,QNE8,QNE9,QNK,QNR2 QNR6,QSC2,QTR2,QWH2,QXE4,QXE6,QXE7,QXE8,QXE9,QXEB,QXH9,SCK4 SM32,SM34,SMEO,STC4,SXE4,SXE7,SXE8,SXE9,SXEB,VAA8,VC2,VC2N VCN2,VDB2,VDE2,VE39,VEP7,VK2,VKB2,VKE4,VKE9,VME2,VMS2,VN27 VNG2,VNS9,VPE4,VPE5,VPE7,VPE9,VS49,VSD4,VTH4,VWA2,VWE,VWT4 VXE2,VXE4,VXE6,VXE7,VXE8,VXE9,VXEB
14	31233-ZE2-003	INSULATOR	1	1	1	1	-------- --------	EDD2,EDS2,EDS6,ENT2,LKE,LXE2,LXE4,LXE8,PAE2,PXE8,PXM8,QAE2 QAE6,QC2,QKA4,QKB2,QMEO,QNB2,QND,QNE2,QNE6,QNE8,QNE9,QNK,QNR2 QNR6,QSC2,QTR2,QWH2,QXE4,QXE6,QXE7,QXE8,QXE9,QXEB,QXH9,SCK4 SM32,SM34,SMEO,STC4,SXE4,SXE7,SXE8,SXE9,SXEB,VAA8,VC2,VC2N VCN2,VDB2,VDE2,VE39,VEP7,VK2,VKB2,VKE4,VKE9,VME2,VMS2,VN27 VNG2,VNS9,VPE4,VPE5,VPE7,VPE9,VS49,VSD4,VTH4,VWA2,VWE,VWT4 VXE2,VXE4,VXE6,VXE7,VXE8,VXE9,VXEB

Ref. No.	Part No.	Description	Reqd. QTY GX 390 U1	GX 390 R1	GX 390 U2	GX 390 R2	Serial No.		Parts catalogue code
15	90007-ZE2-003	BOLT-WASHER, 5X14	2	2	2	2	--------	--------	EDD2,EDS2,EDS6,ENT2,LKE,LXE2,LXE4,LXE8,PAE2,PXE8,PXM8,QAE2 QAE6,QC2,QKA4,QKB2,QMEO,QNB2,QND,QNE2,QNE6,QNE8,QNE9,QNK,QNR2 QNR6,QSC2,QTR2,QWH2,QXE4,QXE6,QXE7,QXE8,QXE9,QXEB,QXH9,SCK4 SM32,SM34,SMEO,STC4,SXE4,SXE7,SXE8,SXE9,SXEB,VAA8,VC2,VC2N VCN2,VDB2,VDE2,VE39,VEP7,VK2,VKB2,VKE4,VKE9,VME2,VMS2,VN27 VNG2,VNS9,VPE4,VPE5,VPE7,VPE9,VS49,VSD4,VTH4,VWA2,VWE,VWT4 VXE2,VXE4,VXE6,VXE7,VXE8,VXE9,VXEB
16	90110-ZE2-003	SCREW-WASHER, 4X6	1	1	1	1	--------	--------	EDD2,EDS2,EDS6,ENT2,LKE,LXE2,LXE4,LXE8,PAE2,PXE8,PXM8,QAE2 QAE6,QC2,QKA4,QKB2,QMEO,QNB2,QND,QNE2,QNE6,QNE8,QNE9,QNK,QNR2 QNR6,QSC2,QTR2,QWH2,QXE4,QXE6,QXE7,QXE8,QXE9,QXEB,QXH9,SCK4 SM32,SM34,SMEO,STC4,SXE4,SXE7,SXE8,SXE9,SXEB,VAA8,VC2,VC2N VCN2,VDB2,VDE2,VE39,VEP7,VK2,VKB2,VKE4,VKE9,VME2,VMS2,VN27 VNG2,VNS9,VPE4,VPE5,VPE7,VPE9,VS49,VSD4,VTH4,VWA2,VWE,VWT4 VXE2,VXE4,VXE6,VXE7,VXE8,VXE9,VXEB
17	91601-ZE2-003	PACKING	1	1	1	1	--------	--------	EDD2,EDS2,EDS6,ENT2,LKE,LXE2,LXE4,LXE8,PAE2,PXE8,PXM8,QAE2 QAE6,QC2,QKA4,QKB2,QMEO,QNB2,QND,QNE2,QNE6,QNE8,QNE9,QNK,QNR2 QNR6,QSC2,QTR2,QWH2,QXE4,QXE6,QXE7,QXE8,QXE9,QXEB,QXH9,SCK4 SM32,SM34,SMEO,STC4,SXE4,SXE7,SXE8,SXE9,SXEB,VAA8,VC2,VC2N VCN2,VDB2,VDE2,VE39,VEP7,VK2,VKB2,VKE4,VKE9,VME2,VMS2,VN27 VNG2,VNS9,VPE4,VPE5,VPE7,VPE9,VS49,VSD4,VTH4,VWA2,VWE,VWT4 VXE2,VXE4,VXE6,VXE7,VXE8,VXE9,VXEB
18	93892-05032-18	SCREW-WASHER, 5X32	4	4	4	4	--------	--------	EDD2,EDS2,EDS6,ENT2,LKE,LXE2,LXE4,LXE8,PAE2,PXE8,PXM8,QAE2 QAE6,QC2,QKA4,QKB2,QMEO,QNB2,QND,QNE2,QNE6,QNE8,QNE9,QNK,QNR2 QNR6,QSC2,QTR2,QWH2,QXE4,QXE6,QXE7,QXE8,QXE9,QXEB,QXH9,SCK4 SM32,SM34,SMEO,STC4,SXE4,SXE7,SXE8,SXE9,SXEB,VAA8,VC2,VC2N VCN2,VDB2,VDE2,VE39,VEP7,VK2,VKB2,VKE4,VKE9,VME2,VMS2,VN27 VNG2,VNS9,VPE4,VPE5,VPE7,VPE9,VS49,VSD4,VTH4,VWA2,VWE,VWT4 VXE2,VXE4,VXE6,VXE7,VXE8,VXE9,VXEB
19	94070-06080	NUT-WASHER, 6MM	2	2	2	2	--------	--------	EDD2,EDS2,EDS6,ENT2,LKE,LXE2,LXE4,LXE8,PAE2,PXE8,PXM8,QAE2 QAE6,QC2,QKA4,QKB2,QMEO,QNB2,QND,QNE2,QNE6,QNE8,QNE9,QNK,QNR2 QNR6,QSC2,QTR2,QWH2,QXE4,QXE6,QXE7,QXE8,QXE9,QXEB,QXH9,SCK4 SM32,SM34,SMEO,STC4,SXE4,SXE7,SXE8,SXE9,SXEB,VAA8,VC2,VC2N VCN2,VDB2,VDE2,VE39,VEP7,VK2,VKB2,VKE4,VKE9,VME2,VMS2,VN27 VNG2,VNS9,VPE4,VPE5,VPE7,VPE9,VS49,VSD4,VTH4,VWA2,VWE,VWT4 VXE2,VXE4,VXE6,VXE7,VXE8,VXE9,VXEB
20	95701-08035-08	BOLT, FLANGE, 8X35	2	2	2	2	--------	--------	EDD2,EDS2,EDS6,ENT2,LKE,LXE2,LXE4,LXE8,PAE2,PXE8,PXM8,QAE2 QAE6,QC2,QKA4,QKB2,QMEO,QNB2,QND,QNE2,QNE6,QNE8,QNE9,QNK,QNR2 QNR6,QSC2,QTR2,QWH2,QXE4,QXE6,QXE7,QXE8,QXE9,QXEB,QXH9,SCK4 SM32,SM34,SMEO,STC4,SXE4,SXE7,SXE8,SXE9,SXEB,VAA8,VC2,VC2N VCN2,VDB2,VDE2,VE39,VEP7,VK2,VKB2,VKE4,VKE9,VME2,VMS2,VN27 VNG2,VNS9,VPE4,VPE5,VPE7,VPE9,VS49,VSD4,VTH4,VWA2,VWE,VWT4 VXE2,VXE4,VXE6,VXE7,VXE8,VXE9,VXEB

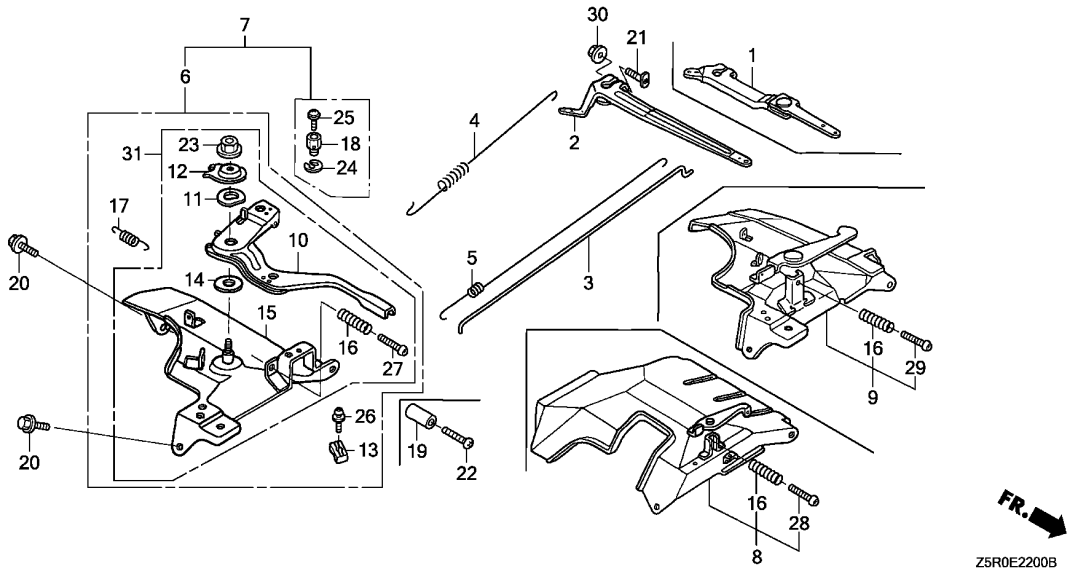

Ref. No.	L.O.N.	(Relative ref. Number) Description	F.R.T.

Ref. No.	Part No.	Description	Reqd. QTY GX 390 U1	GX 390 R1	GX 390 U2	GX 390 R2	Serial No.		Parts catalogue code
1	16550-ZE3-700	ARM COMP., GOVERNOR ·····	1	1	-	1	--------	--------	ED6,EDD2,EDS2,EDS6,EDT6,EN6,ENT2,QKB2,VAC2,VC2,VC2N,VCN2,VD2 VDB2,VKB2,VKE4,VKE9,VKX4,VKX9,VMS2,VWA2,VWC,VWE,VWS,VXG
2	16551-ZE3-000	ARM, GOVERNOR ·····	1	1	1	1	--------	--------	HA2,HJA2,LKE,LX2,LXE2,LXE4,LXE8,LXQ4,LXU,PA2,PAE2,PXE8,PXM8 PXU,PXU4,QA2,QA26,QAA2,QAE2,QAE6,QAW,QC2,QDW9,QE,QHB4,QK4,QKA4 QME0,QNB2,QND,QNE2,QNE6,QNE8,QNE9,QNK,QNR2,QNR6,QSC2,QTR2,QWA2 QWA4,QWC4,QWH2,QWT2,QXB,QXB7,QXB9,QXC4,QXC6,QXC9,QXE4,QXE6 QXE7,QXE8,QXE9,QXEB,QXH9,QXQ4,QXQ7,QXS4,QXU,SCK4,SHQ4,SM32 SM34,SMC1,SMD3,SME0,SME6,SMX2,SMX4,SNC,STC4,SWA4,SXB,SXB7,SXB9 SXE4,SXE7,SXE8,SXE9,SXEB,SXQ4,SXU,VA2,VAA1,VAA8,VAG2,VDE2,VE39 VEP7,VEP9,VK2,VM2,VMA2,VME2,VN17,VN27,VNG1,VNG2,VNS9,VPE4,VPE5 VPE7,VPE9,VPX4,VPX5,VPX7,VPX9,VS39,VS49,VSD,VSD4,VSD7,VSD9 VTH4,VWC7,VWC9,VWT4,VX39,VX8,VXB,VXB7,VXB9,VXE2,VXE4,VXE6,VXE7 VXE8,VXE9,VXEB,VXG2,VXP7,VXQ4
3	16555-ZE3-000	ROD, GOVERNOR ·····	1	1	1	1			
4	16561-ZE3-000	SPRING, GOVERNOR(L=137.5MM) ·	1	1	1	-	--------	--------	ED6,EDD2,EDS2,EDS6,EDT6,EN6,ENT2,HA2,HJA2,LKE,LX2,LXE2,LXE4 LXE8,LXQ4,LXU,PA2,PAE2,PXE8,PXM8,PXU,PXU4,QA2,QA26,QAA2,QAE2 QAE6,QAW,QC2,QDW9,QE,QHB4,QK4,QKA4,QME0,QNB2,QND,QNE2,QNE6 QNE8,QNE9,QNK,QNR2,QNR6,QSC2,QTR2,QWA2,QWA4,QWC4,QWH2,QWT2,QXB QXB7,QXB9,QXC4,QXC6,QXC9,QXE4,QXE6,QXE7,QXE8,QXE9,QXEB,QXH9 QXQ4,QXQ7,QXS4,QXU,SCK4,SHQ4,SM32,SM34,SMC1,SMD3,SME0,SME6 SMX2,SMX4,SNC,STC4,SWA4,SXB,SXB7,SXB9,SXE4,SXE7,SXE8,SXE9,SXEB SXQ4,SXU,VAA1,VAA8,VKE4,VKE9,VKX4,VKX9,VS49,VSD4,VTH4,VWS
	16561-ZE3-710	SPRING, GOVERNOR(L=132.0MM) ·	1	1	-	-	--------	--------	QKB2,VE39,VEP9,VPE4,VPE5,VPE7,VPE9,VPX4,VPX5,VPX7,VPX9,VS39 VWT4,VX39,VXG2
	16561-ZF6-T21	SPRING, GOVERNOR ·····	1	1	-	-	--------	--------	VAC2,VAG2,VC2,VC2N,VCN2,VD2,VDB2,VK2,VKB2,VMS2,VSD,VSD7,VSD9 VWA2,VWC,VWC7,VWC9,VX8,VXE8,VXG
	16561-ZF6-W31	·····	1	-	-	-	--------	1277800	VA2,VDE2,VEP7,VM2,VMA2,VME2,VN17,VN27,VNG1,VNG2,VNS9,VWE,VXB VXB7,VXB9,VXE2,VXE4,VXE6,VXE7,VXE9,VXEB,VXP7,VXQ4

Ref. No.	Part No.	Description	Reqd. QTY GX 390 U1	GX 390 R1	GX 390 U2	GX 390 R2	Serial No.		Parts catalogue code
(4)	16561-ZF6-W32	SPRING, GOVERNOR ·····	1	-	-	-	1277801	--------	VA2,VDE2,VEP7,VM2,VMA2,VME2,VN17,VN27,VNG1,VNG2,VNS9,VWE,VXB VXB7,VXB9,VXE2,VXE4,VXE6,VXE7,VXE9,VXEB,VXP7,VXQ4
			-	1	-	-	--------	--------	VDE2,VN17,VNG1,VNS9,VWE
	16561-ZE3-000	SPRING, GOVERNOR(L=137.5MM) ·	-	-	-	1	--------	--------	ED6,EDD2,EN6,ENT2,PXM8,VWS
	16561-ZK6-D70	SPRING, GOVERNOR ·····	-	-	-	1	--------	--------	EDS6,EDT6
5	16562-ZE3-000	SPRING, THROTTLE RETURN ·····	1	1	1	1	--------	--------	HA2,HJA2,LKE,LX2,LXE2,LXE4,LXE8,LXQ4,LXU,PA2,PAE2,PXE8,PXM8 PXU,PXU4,QA2,QA26,QAA2,QAE2,QAE6,QAW,QC2,QDW9,QE,QHB4,QK4,QKA4 QMEO,QNB2,QND,QNE2,QNE6,QNE8,QNE9,QNK,QNR2,QNR6,QSC2,QTR2,QWA2 QWA4,QWC4,QWH2,QWT2,QXB,QXB7,QXB9,QXC4,QXC6,QXC9,QXE4,QXE6 QXE7,QXE8,QXE9,QXEB,QXH9,QXQ4,QXQ7,QXS4,QXU,SCK4,SHQ4,SM32 SM34,SMC1,SMD3,SMEO,SME6,SMX2,SMX4,SNC,STC4,SWA4,SXB,SXB7,SXB9 SXE4,SXE7,SXE8,SXE9,SXEB,SXQ4,SXU,VA2,VAA1,VAA8,VAG2,VDE2,VE39 VEP7,VEP9,VK2,VKE4,VKE9,VKX4,VKX9,VM2,VMA2,VME2,VN17,VN27,VNG1 VNG2,VNS9,VPE4,VPE5,VPE7,VPE9,VPX4,VPX5,VPX7,VPX9,VS39,VS49 VSD,VSD4,VSD7,VSD9,VTH4,VWC7,VWC9,VWT4,VX39,VX8,VXB,VXB7,VXB9 VXE2,VXE4,VXE6,VXE7,VXE8,VXE9,VXEB,VXG2,VXP7,VXQ4
	16562-ZE3-700	·····	1	1	-	1	--------	--------	ED6,EDD2,EDS2,EDS6,EDT6,EN6,ENT2,QKB2,VAC2,VC2,VC2N,VCN2,VD2 VDB2,VKB2,VMS2,VWA2,VWC,VWE,VWS,VXG
6	16570-ZE3-W20	CONTROL ASSY.(REMOTE) ·····	1	1	-	-	--------	--------	HA2,HJA2,LX2,LXE2,LXE4,LXE8,LXQ4,LXU,PA2,PAE2,PXE8,PXM8,PXU PXU4,QA2,QA26,QAA2,QAE2,QAE6,QAW,QE,QKB2,QMEO,QNB2,QND,QNE2 QNE6,QNE8,QNE9,QNR2,QNR6,QSC2,QWA2,QWA4,QWC4,QWH2,QWT2,QXB QXB7,QXB9,QXC4,QXC6,QXC9,QXE4,QXE6,QXE7,QXE8,QXE9,QXEB,QXH9 QXQ4,QXQ7,QXS4,QXU,SHQ4,SMEO,SWA4,SXB,SXB7,SXB9,SXE4,SXE7,SXE8 SXE9,SXEB,SXQ4,SXU,VA2,VM2,VMA2,VME2
	16500-Z5T-810	CONTROL ASSY.(REMOTE)(ROD) ··	-	-	1	1	--------	--------	PXE8,PXM8,PXU,PXU4,QXE8,QXU,SXE4
7	16570-ZE3-W40	CONTROL ASSY.(REMOTE) (WITH PLUG)	1	-	-	-	--------	--------	LKE
	16570-ZE3-W10	CONTROL ASSY.(REMOTE) ·····	1	-	-	-	--------	--------	QC2,QDW9,QHB4,QK4,QKA4,QNK,QTR2,SCK4,SM32,SM34,SMC1,SMD3,SME6 SMX2,SMX4,SNC,STC4
	16500-Z5T-800	·····	-	-	1	-	--------	--------	SM32,SM34,SMX2
8	16570-ZE3-700	CONTROL ASSY. ·····	1	1	-	-	--------	--------	ED6,EDD2,EN6,ENT2,VAA1,VAA8,VKE4,VKE9,VKX4,VKX9,VS49,VSD4,VTH4 VWC,VWE
	16570-ZE3-710	·····	1	1	-	-	--------	--------	EDS2,EDS6,EDT6,VWS
	16500-Z5T-880	·····	-	-	-	1	--------	--------	ED6,EDD2,EN6,ENT2
	16500-Z5T-890	·····	-	-	-	1	--------	--------	EDS6,EDT6,VWS
9	16570-ZE3-721	CONTROL ASSY. ·····	1	1	-	-	--------	--------	VAC2,VAG2,VC2,VC2N,VCN2,VD2,VDB2,VK2,VKB2,VMS2,VPE4,VPE5,VPX4 VPX5,VSD,VWA2,VWT4,VX8,VXE8,VXG,VXG2
	16570-ZK3-D20	·····	1	-	-	-	--------	1188245	VE39,VEP9,VPE7,VPE9,VPX7,VPX9,VS39,VSD7,VSD9,VWC7,VWC9,VX39
	16570-ZK3-D21	·····	1	-	-	-	1188246	--------	VE39,VEP9,VPE7,VPE9,VPX7,VPX9,VS39,VSD7,VSD9,VWC7,VWC9,VX39
			-	1	-	-	--------	--------	VEP9,VPE7,VPE9,VPX7,VPX9,VS39,VWC7,VWC9
10	16571-ZE3-W00	LEVER, CONTROL ·····	1	1	1	1	--------	--------	HA2,HJA2,LKE,LX2,LXE2,LXE4,LXE8,LXQ4,LXU,PA2,PAE2,PXE8,PXM8 PXU,PXU4,QA2,QA26,QAA2,QAE2,QAE6,QAW,QC2,QDW9,QE,QHB4,QK4,QKA4 QKB2,QMEO,QNB2,QND,QNE2,QNE6,QNE8,QNE9,QNK,QNR2,QNR6,QSC2,QTR2 QWA2,QWA4,QWC4,QWH2,QWT2,QXB,QXB7,QXB9,QXC4,QXC6,QXC9,QXE4 QXE6,QXE7,QXE8,QXE9,QXEB,QXH9,QXQ4,QXQ7,QXS4,QXU,SCK4,SHQ4 SM32,SM34,SMC1,SMD3,SMEO,SME6,SMX2,SMX4,SNC,STC4,SWA4,SXB,SXB7 SXB9,SXE4,SXE7,SXE8,SXE9,SXEB,SXQ4,SXU,VA2,VDE2,VEP7,VM2,VMA2 VME2,VXB,VXB7,VXB9,VXE2,VXE4,VXE6,VXE7,VXE9,VXEB,VXP7,VXQ4
	16571-ZE3-W10	·····	1	1	-	-	--------	--------	VN17,VN27,VNG1,VNG2,VNS9

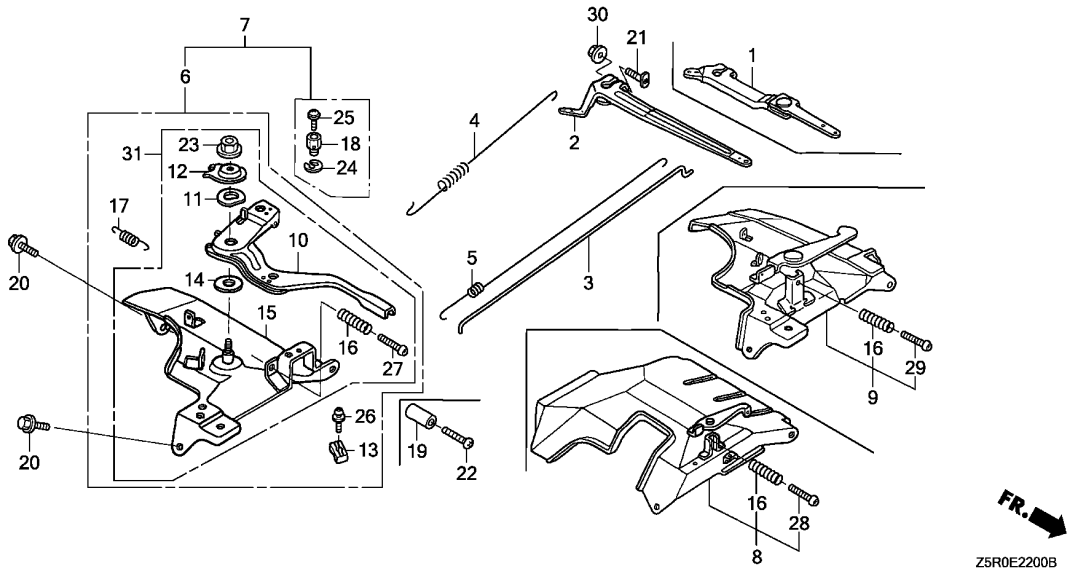

Ref. No.	Part No.	Description	Reqd. QTY GX 390 U1	GX 390 R1	GX 390 U2	GX 390 R2	Serial No.	Parts catalogue code
11	16574-ZE1-000	SPRING, LEVER	1	1	1	1	-------- --------	HA2,HJA2,LKE,LX2,LXE2,LXE4,LXE8,LXQ4,LXU,PA2,PAE2,PXE8,PXM8 PXU,PXU4,QA2,QA26,QAA2,QAE2,QAE6,QAW,QC2,QDW9,QE,QHB4,QK4,QKA4 QKB2,QME0,QNB2,QND,QNE2,QNE6,QNE8,QNE9,QNK,QNR2,QNR6,QSC2,QTR2 QWA2,QWA4,QWC4,QWH2,QWT2,QXB,QXB7,QXB9,QXC4,QXC6,QXC9,QXE4 QXE6,QXE7,QXE8,QXE9,QXEB,QXH9,QXQ4,QXQ7,QXS4,QXU,SCK4,SHQ4 SM32,SM34,SMC1,SMD3,SME0,SME6,SMX2,SMX4,SNC,STC4,SWA4,SXB,SXB7 SXB9,SXE4,SXE7,SXE8,SXE9,SXEB,SXQ4,SXU,VA2,VDE2,VEP7,VM2,VMA2 VME2,VN17,VN27,VNG1,VNG2,VNS9,VXB,VXB7,VXB9,VXE2,VXE4,VXE6 VXE7,VXE9,VXEB,VXP7,VXQ4
12	16575-ZE2-W00	WASHER, CONTROL LEVER	1	1	1	1	-------- --------	HA2,HJA2,LKE,LX2,LXE2,LXE4,LXE8,LXQ4,LXU,PA2,PAE2,PXE8,PXM8 PXU,PXU4,QA2,QA26,QAA2,QAE2,QAE6,QAW,QC2,QDW9,QE,QHB4,QK4,QKA4 QKB2,QME0,QNB2,QND,QNE2,QNE6,QNE8,QNE9,QNK,QNR2,QNR6,QSC2,QTR2 QWA2,QWA4,QWC4,QWH2,QWT2,QXB,QXB7,QXB9,QXC4,QXC6,QXC9,QXE4 QXE6,QXE7,QXE8,QXE9,QXEB,QXH9,QXQ4,QXQ7,QXS4,QXU,SCK4,SHQ4 SM32,SM34,SMC1,SMD3,SME0,SME6,SMX2,SMX4,SNC,STC4,SWA4,SXB,SXB7 SXB9,SXE4,SXE7,SXE8,SXE9,SXEB,SXQ4,SXU,VA2,VDE2,VEP7,VM2,VMA2 VME2,VN17,VN27,VNG1,VNG2,VNS9,VXB,VXB7,VXB9,VXE2,VXE4,VXE6 VXE7,VXE9,VXEB,VXP7,VXQ4
13	16576-891-000	HOLDER, CABLE	1	1	1	1	-------- --------	HA2,HJA2,LKE,LX2,LXE2,LXE4,LXE8,LXQ4,LXU,PA2,PAE2,PXE8,PXM8 PXU,PXU4,QA2,QA26,QAA2,QAE2,QAE6,QAW,QC2,QDW9,QE,QHB4,QK4,QKA4 QKB2,QME0,QNB2,QND,QNE2,QNE6,QNE8,QNE9,QNK,QNR2,QNR6,QSC2,QTR2 QWA2,QWA4,QWC4,QWH2,QWT2,QXB,QXB7,QXB9,QXC4,QXC6,QXC9,QXE4 QXE6,QXE7,QXE8,QXE9,QXEB,QXH9,QXQ4,QXQ7,QXS4,QXU,SCK4,SHQ4 SM32,SM34,SMC1,SMD3,SME0,SME6,SMX2,SMX4,SNC,STC4,SWA4,SXB,SXB7 SXB9,SXE4,SXE7,SXE8,SXE9,SXEB,SXQ4,SXU,VA2,VM2,VMA2,VME2

Ref. No.	Part No.	Description	Reqd. QTY GX 390 U1	GX 390 R1	GX 390 U2	GX 390 R2	Serial No.		Parts catalogue code
14	16578-ZE1-000	SPACER, CONTROL LEVER ·····	1	1	1	1	--------	--------	HA2,HJA2,LKE,LX2,LXE2,LXE4,LXE8,LXQ4,LXU,PA2,PAE2,PXE8,PXM8 PXU,PXU4,QA2,QA26,QAA2,QAE2,QAE6,QAW,QC2,QDW9,QE,QHB4,QK4,QKA4 QKB2,QME0,QNB2,QND,QNE2,QNE6,QNE8,QNE9,QNK,QNR2,QNR6,QSC2,QTR2 QWA2,QWA4,QWC4,QWH2,QWT2,QXB,QXB7,QXB9,QXC4,QXC6,QXC9,QXE4 QXE6,QXE7,QXE8,QXE9,QXEB,QXH9,QXQ4,QXQ7,QXS4,QXU,SCK4,SHQ4 SM32,SM34,SMC1,SMD3,SME0,SME6,SMX2,SMX4,SNC,STC4,SWA4,SXB,SXB7 SXB9,SXE4,SXE7,SXE8,SXE9,SXEB,SXQ4,SXU,VA2,VDE2,VEP7,VM2,VMA2 VME2,VN17,VN27,VNG1,VNG2,VNS9,VXB,VXB7,VXB9,VXE2,VXE4,VXE6 VXE7,VXE9,VXEB,VXP7,VXQ4
15	16581-ZE3-W00	BASE COMP., CONTROL(###) ····	1	1	-	-	--------	--------	HA2,HJA2,LKE,LX2,LXE2,LXE4,LXE8,LXQ4,LXU,PA2,PAE2,PXE8,PXM8 PXU,PXU4,QA2,QA26,QAA2,QAE2,QAE6,QAW,QC2,QDW9,QE,QHB4,QK4,QKA4 QKB2,QME0,QNB2,QND,QNE2,QNE6,QNE8,QNE9,QNK,QNR2,QNR6,QSC2,QTR2 QWA2,QWA4,QWC4,QWH2,QWT2,QXB,QXB7,QXB9,QXC4,QXC6,QXC9,QXE4 QXE6,QXE7,QXE8,QXE9,QXEB,QXH9,QXQ4,QXQ7,QXS4,QXU,SCK4,SHQ4 SM32,SM34,SMC1,SMD3,SME0,SME6,SMX2,SMX4,SNC,STC4,SWA4,SXB,SXB7 SXB9,SXE4,SXE7,SXE8,SXE9,SXEB,SXQ4,SXU,VA2,VDE2,VM2,VMA2,VME2 VNG1,VNG2,VXB,VXE2,VXE4,VXE6,VXEB,VXQ4
	16580-Z5T-000	BASE COMP., CONTROL ·····	-	-	1	1	--------	--------	PXE8,PXM8,PXU,PXU4,QXE8,QXU,SM32,SM34,SMX2,SXE4
16	16584-883-300	SPRING, CONTROL ADJUSTING ···	1	1	1	1			
17	16592-883-310	SPRING, CABLE RETURN ·····	1	1	1	1	--------	--------	HA2,HJA2,LKE,LX2,LXE2,LXE4,LXE8,LXQ4,LXU,PA2,PAE2,PXE8,PXM8 PXU,PXU4,QA2,QA26,QAA2,QAE2,QAE6,QAW,QC2,QDW9,QE,QHB4,QK4,QKA4 QKB2,QME0,QNB2,QND,QNE2,QNE6,QNE8,QNE9,QNK,QNR2,QNR6,QSC2,QTR2 QWA2,QWA4,QWC4,QWH2,QWT2,QXB,QXB7,QXB9,QXC4,QXC6,QXC9,QXE4 QXE6,QXE7,QXE8,QXE9,QXEB,QXH9,QXQ4,QXQ7,QXS4,QXU,SCK4,SHQ4 SM32,SM34,SMC1,SMD3,SME0,SME6,SMX2,SMX4,SNC,STC4,SWA4,SXB,SXB7 SXB9,SXE4,SXE7,SXE8,SXE9,SXEB,SXQ4,SXU,VA2,VM2,VMA2,VME2
18	16594-883-010	HOLDER, WIRE ·····	1	-	1	-	--------	--------	LKE,QC2,QDW9,QHB4,QK4,QKA4,QNK,QTR2,SCK4,SM32,SM34,SMC1,SMD3 SME6,SMX2,SMX4,SNC,STC4
19	16599-ZG1-M10	COLLAR, STOPPER ·····	(1)	(1)	(1)	-	--------	--------	LKE,LXE4,LXQ4,QE,QHB4,QK4,QKA4,QME0,QWA4,QWC4,QXB,QXB7,QXB9 QXC4,QXE4,QXE7,QXE9,QXEB,QXH9,QXQ4,QXQ7,SCK4,SHQ4,SMC1,SMD3 SME0,SME6,SNC,STC4,SWA4,SXB,SXB7,SXB9,SXE4,SXE7,SXE9,SXEB,SXQ4 VE39,VEP7,VEP9,VN17,VN27,VNG1,VNG2,VNS9,VPE4,VPE5,VPE7,VPE9 VPX4,VPX5,VPX7,VPX9,VS39,VSD,VSD7,VSD9,VWC7,VWC9,VWT4,VX39,VXB VXB7,VXB9,VXE4,VXE7,VXE9,VXEB,VXP7,VXQ4
20	90013-883-000	BOLT, FLANGE, 6X12(CT200) ···	2	2	2	2			
21	90015-ZE5-010	BOLT, GOVERNOR ARM ·····	1	1	1	1			
22	90016-ZG9-N30	SCREW, RECESSED, 5X25 ·····	(1)	(1)	(1)	-	--------	--------	LKE,LXE4,LXQ4,QE,QHB4,QK4,QKA4,QME0,QWA4,QWC4,QXB,QXB7,QXB9 QXC4,QXE4,QXE7,QXE9,QXEB,QXH9,QXQ4,QXQ7,SCK4,SHQ4,SMC1,SMD3 SME0,SME6,SNC,STC4,SWA4,SXB,SXB7,SXB9,SXE4,SXE7,SXE9,SXEB,SXQ4 VE39,VEP7,VEP9,VN17,VN27,VNG1,VNG2,VNS9,VPE4,VPE5,VPE7,VPE9 VPX4,VPX5,VPX7,VPX9,VS39,VSD,VSD7,VSD9,VWC7,VWC9,VWT4,VX39,VXB VXB7,VXB9,VXE4,VXE7,VXE9,VXEB,VXP7,VXQ4
23	90114-SA0-000	NUT, SELF-LOCK, 6MM ·····	1	1	1	1	--------	--------	HA2,HJA2,LKE,LX2,LXE2,LXE4,LXE8,LXQ4,LXU,PA2,PAE2,PXE8,PXM8 PXU,PXU4,QA2,QA26,QAA2,QAE2,QAE6,QAW,QC2,QDW9,QE,QHB4,QK4,QKA4 QKB2,QME0,QNB2,QND,QNE2,QNE6,QNE8,QNE9,QNK,QNR2,QNR6,QSC2,QTR2 QWA2,QWA4,QWC4,QWH2,QWT2,QXB,QXB7,QXB9,QXC4,QXC6,QXC9,QXE4 QXE6,QXE7,QXE8,QXE9,QXEB,QXH9,QXQ4,QXQ7,QXS4,QXU,SCK4,SHQ4 SM32,SM34,SMC1,SMD3,SME0,SME6,SMX2,SMX4,SNC,STC4,SWA4,SXB,SXB7 SXB9,SXE4,SXE7,SXE8,SXE9,SXEB,SXQ4,SXU,VA2,VDE2,VEP7,VM2,VMA2 VME2,VN17,VN27,VNG1,VNG2,VNS9,VXB,VXB7,VXB9,VXE2,VXE4,VXE6 VXE7,VXE9,VXEB,VXP7,VXQ4
24	90605-230-000	CIRCLIP, 5MM ·····	1	-	1	-	--------	--------	LKE,QC2,QDW9,QHB4,QK4,QKA4,QNK,QTR2,SCK4,SM32,SM34,SMC1,SMD3 SME6,SMX2,SMX4,SNC,STC4
25	93500-04006-0H	SCREW, PAN, 4X6 ·····	1	-	1	-	--------	--------	LKE,QC2,QDW9,QHB4,QK4,QKA4,QNK,QTR2,SCK4,SM32,SM34,SMC1,SMD3 SME6,SMX2,SMX4,SNC,STC4

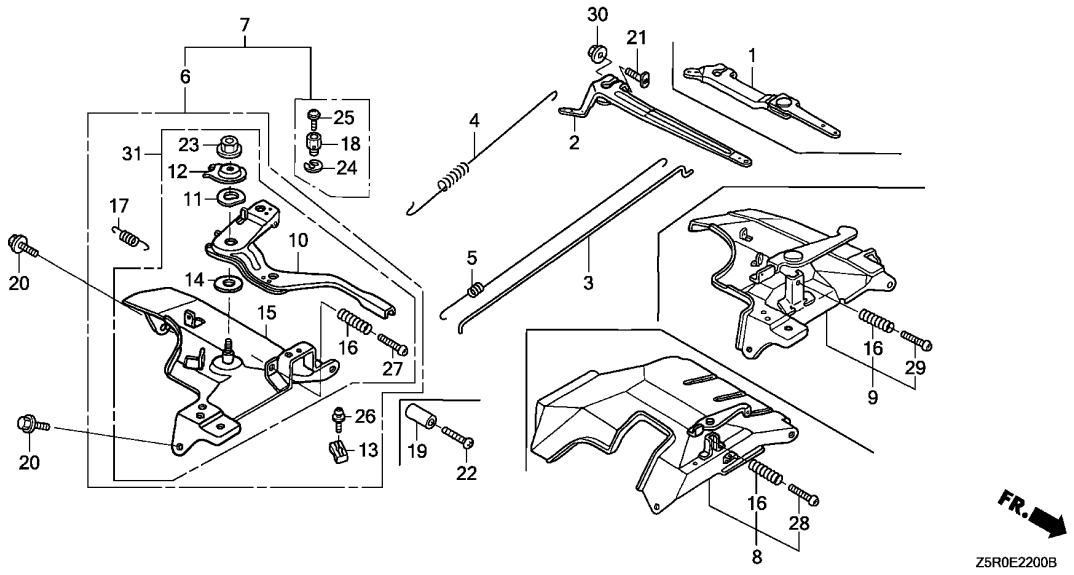

Ref. No.	Part No.	Description	Reqd. QTY GX 390 U1	GX 390 R1	GX 390 U2	GX 390 R2	Serial No.		Parts catalogue code
26	93500-05016-0A	SCREW, PAN, 5X16 ·····	1	1	1	1	--------	--------	HA2,HJA2,LKE,LX2,LXE2,LXE4,LXE8,LXQ4,LXU,PA2,PAE2,PXE8,PXM8 PXU,PXU4,QA2,QA26,QAA2,QAE2,QAE6,QAW,QC2,QDW9,QE,QHB4,QK4,QKA4 QKB2,QME0,QNB2,QND,QNE2,QNE6,QNE8,QNE9,QNK,QNR2,QNR6,QSC2,QTR2 QWA2,QWA4,QWC4,QWH2,QWT2,QXB,QXB7,QXB9,QXC4,QXC6,QXC9,QXE4 QXE6,QXE7,QXE8,QXE9,QXEB,QXH9,QXQ4,QXQ7,QXS4,QXU,SCK4,SHQ4 SM32,SM34,SMC1,SMD3,SME0,SME6,SMX2,SMX4,SNC,STC4,SWA4,SXB,SXB7 SXB9,SXE4,SXE7,SXE8,SXE9,SXEB,SXQ4,SXU,VA2,VM2,VMA2,VME2
27	93500-05032-0A	SCREW, PAN, 5X32 ·····	1	1	1	1	--------	--------	HA2,HJA2,LKE,LX2,LXE2,LXE4,LXE8,LXQ4,LXU,PA2,PAE2,PXE8,PXM8 PXU,PXU4,QA2,QA26,QAA2,QAE2,QAE6,QAW,QC2,QDW9,QE,QHB4,QK4,QKA4 QKB2,QME0,QNB2,QND,QNE2,QNE6,QNE8,QNE9,QNK,QNR2,QNR6,QSC2,QTR2 QWA2,QWA4,QWC4,QWH2,QWT2,QXB,QXB7,QXB9,QXC4,QXC6,QXC9,QXE4 QXE6,QXE7,QXE8,QXE9,QXEB,QXH9,QXQ4,QXQ7,QXS4,QXU,SCK4,SHQ4 SM32,SM34,SMC1,SMD3,SME0,SME6,SMX2,SMX4,SNC,STC4,SWA4,SXB,SXB7 SXB9,SXE4,SXE7,SXE8,SXE9,SXEB,SXQ4,SXU,VA2,VDE2,VEP7,VM2,VMA2 VME2,VN17,VN27,VNG1,VNG2,VNS9,VXB,VXB7,VXB9,VXE2,VXE4,VXE6 VXE7,VXE9,VXEB,VXP7,VXQ4
28	93500-05035-0A	SCREW, PAN, 5X35 ·····	1	1	-	1	--------	--------	ED6,EDD2,EDS2,EDS6,EDT6,EN6,ENT2,VAA1,VAA8,VKE4,VKE9,VKX4,VKX9 VS49,VSD4,VTH4,VWC,VWE,VWS
29	93500-05045-0A	SCREW, PAN, 5X45 ·····	1	1	-	-	--------	--------	VAC2,VAG2,VC2,VC2N,VCN2,VD2,VDB2,VE39,VEP9,VK2,VKB2,VMS2,VPE4 VPE5,VPE7,VPE9,VPX4,VPX5,VPX7,VPX9,VS39,VSD,VSD7,VSD9,VWA2 VWC7,VWC9,VWT4,VX39,VX8,VXE8,VXG,VXG2
30	94050-06000	NUT, FLANGE, 6MM ·····	1	1	1	1			
31	16570-ZE3-W00	CONTROL ASSY.(STD.) ·····	1	1	-	-	--------	--------	VDE2,VXB,VXE2,VXE4,VXE6,VXEB,VXQ4
	16570-ZK3-720	CONTROL ASSY. ·····	1	1	-	-	--------	--------	VN17,VN27,VNS9
	16570-ZE3-W30	·····	1	1	-	-	--------	--------	VNG1,VNG2
	16570-ZK3-870	·····	1	-	-	-	--------	--------	VEP7,VXB7,VXB9,VXE7,VXE9,VXP7

AUTO THROTTLE

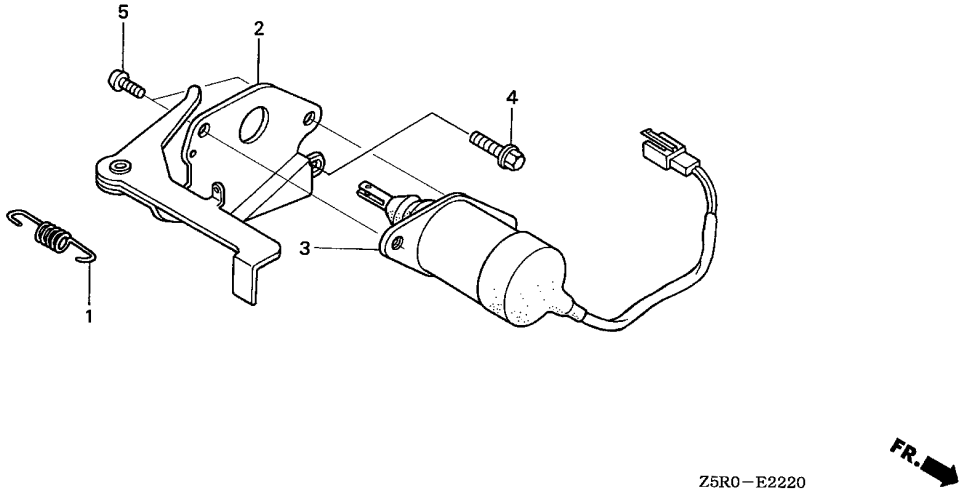

Ref. No.	L.O.N.	(Relative ref. Number) Description	F.R.T.

Ref. No.	Part No.	Description	Reqd. QTY GX 390 U1	GX 390 R1	GX 390 U2	GX 390 R2	Serial No.		Parts catalogue code
1	16268-893-000	SPRING, CHOKE RETURN ·····	1	1	-	1	--------	--------	ED6,EDD2,EDS2,EDS6,EDT6,EN6,ENT2,VC2,VC2N,VD2,VDB2,VMS2,VWC VWE,VWS,VXG
2	17850-ZD1-E30	LEVER COMP., THROTTLE ·····	1	1	-	1	--------	--------	ED6,EDD2,EDS2,EDS6,EDT6,EN6,ENT2,VC2,VC2N,VD2,VDB2,VMS2,VWC VWE,VWS,VXG
3	36160-ZB4-013	SOLENOID ASSY. ·····	1	-	-	-	--------	--------	VC2N
	36160-ZB4-003	·····	1	-	-	-	--------	--------	VMS2
			1	-	-	-	--------	1444979	ED6,EDD2,EDS2,EDS6,EDT6,EN6,ENT2,VC2,VD2,VDB2,VWC,VWE,VWS,VXG
	36160-ZB4-013	·····	1	-	-	-	1444980	--------	ED6,EDD2,EDS2,EDS6,EDT6,EN6,ENT2,VC2,VD2,VDB2,VWC,VWE,VWS,VXG
			-	1	-	1	--------	--------	ED6,EDD2,EDS2,EDS6,EDT6,EN6,ENT2,VC2,VD2,VDB2,VWC,VWE,VWS,VXG
4	90013-883-000	BOLT, FLANGE, 6X12(CT200) ···	1	1	-	1	--------	--------	ED6,EDD2,EDS2,EDS6,EDT6,EN6,ENT2,VC2,VC2N,VD2,VDB2,VMS2,VWC VWE,VWS,VXG
5	93500-05008-0A	SCREW, PAN, 5X8 ·····	2	2	-	2	--------	--------	ED6,EDD2,EDS2,EDS6,EDT6,EN6,ENT2,VC2,VC2N,VD2,VDB2,VMS2,VWC VWE,VWS,VXG

CONTROL BOX(1)

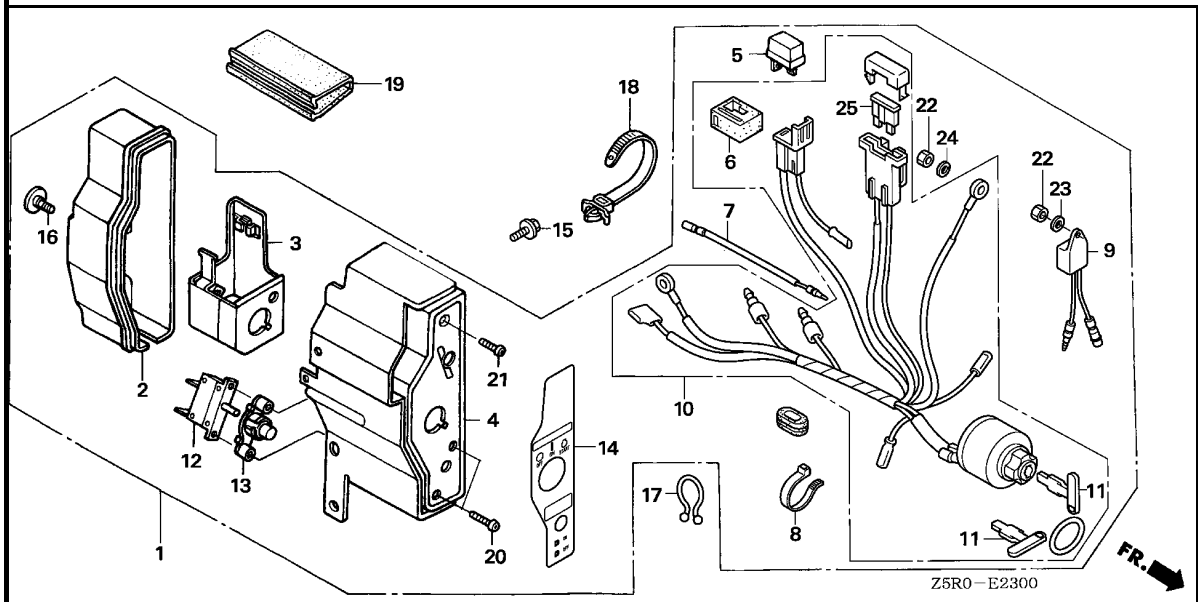

Ref. No.	L.O.N.	(Relative ref. Number) Description	F.R.T.

Ref. No.	Part No.	Description	Reqd. QTY GX 390 U1	GX 390 R1	GX 390 U2	GX 390 R2	Serial No.		Parts catalogue code
1	31610-Z5T-802ZB	BOX ASSY., CONTROL(EXP-ALERT)							
		NH1.....BLACK	1	1	-	-	--------	--------	PXE8,VC2,VC2N
	31610-Z5T-801ZA	*R280*.....POWER RED	1	-	-	-	--------	--------	LXE8,QXEB,SXE7,SXE8,SXE9,SXEB,VEP7,VXE8,VXEB
	31610-Z5T-802ZA	*R280*.....POWER RED	1	-	-	-	--------	--------	VC2,VC2N
	31610-Z5T-801ZC	*NH105*...MAT BLACK (#15-#20)	1	-	-	-	--------	--------	VME2,VMS2
	31610-Z5S-802ZB	BOX ASSY., CONTROL(EXP-ALERT) (3A)							
		R280.....POWER RED	1	-	-	-	--------	--------	VN27
	31610-Z5S-801ZA	*NH1*.....BLACK	1	-	-	-	--------	--------	VNG2
	31610-Z5S-801ZC	*T39*.....GEKO BLUE	1	-	-	-	--------	--------	VNG2
	31610-Z5T-801ZD	BOX ASSY., CONTROL(EXP-ALERT)							
		T39.....GEKO BLUE	1	-	-	-	--------	--------	VXEB
	31610-Z5T-801ZA	*R280*.....POWER RED	1	-	-	-	--------	1416882	LXE2,LXE4,PXE8,QXE4,QXE6,QXE7,QXE8,QXE9,SXE4,VAA8,VC2,VDE2 VKB2,VXE2,VXE4,VXE6,VXE7,VXE9
	31610-Z5T-801ZC	*NH105*...MAT BLACK (#15-#20)	1	-	-	-	--------	1416882	VDE2,VXE2,VXE7,VXE9
	31610-Z5T-801ZB	*NH1*.....BLACK	1	-	-	-	--------	1416882	VXEB
	31610-Z5S-801ZB	BOX ASSY., CONTROL(EXP-ALERT) (3A)							
		R280.....POWER RED	1	-	-	-	--------	1419412	PAE2,QAE2,QAE6,VK2
	31610-Z5S-801ZA	*NH1*.....BLACK	1	-	-	-	--------	1419412	QAE2,VN27,VNS9
	31610-Z5T-802ZA	BOX ASSY., CONTROL(EXP-ALERT)							
		R280.....POWER RED	1	-	-	-	1416883	--------	LXE2,LXE4,PXE8,QXE4,QXE6,QXE7,QXE8,QXE9,SXE4,VAA8,VDE2,VKB2 VXE2,VXE4,VXE6,VXE7,VXE9
	31610-Z5T-802ZC	*NH105*...MAT BLACK (#15-#20)	1	-	-	-	1416883	--------	VDE2,VXE2,VXE7,VXE9
	31610-Z5T-802ZB	*NH1*.....BLACK	1	-	-	-	1416883	--------	VXEB
	31610-Z5S-802ZB	BOX ASSY., CONTROL(EXP-ALERT) (3A)							
		R280.....POWER RED	1	-	-	-	1419413	--------	PAE2,QAE2,QAE6,VK2
	31610-Z5S-802ZA	*NH1*.....BLACK	1	-	-	-	1419413	--------	QAE2,VN27,VNS9

CONTROL BOX(1)

Ref. No.	Part No.	Description	Reqd. QTY GX 390 U1	GX 390 R1	GX 390 U2	GX 390 R2	Serial No.		Parts catalogue code
(1)	31610-Z5T-802ZA	BOX ASSY., CONTROL(EXP-ALERT)							
		R280.....POWER RED	-	1	-	-	--------	--------	PXM8,VAA8,VC2,VDE2,VKB2
	31610-Z5T-802ZC	*NH105*...MAT BLACK (#15-#20)	-	1	-	-	--------	--------	VDE2
	31610-Z5S-802ZB	BOX ASSY., CONTROL(EXP-ALERT) (3A)							
		R280.....POWER RED	-	1	-	-	--------	--------	VK2
	31610-Z5S-802ZA	*NH1*.....BLACK	-	1	-	-	--------	--------	VNS9
	31610-Z5T-811ZB	BOX ASSY., CONTROL(EXTERNAL)							
		R280.....POWER RED	-	-	1	1	--------	--------	PXE8,PXM8,QXE8,SXE4
	31610-Z5T-811ZA	*NH1*.....BLACK	-	-	1	-	--------	--------	PXE8
2	31612-ZE2-003	CASE, CONTROL	1	1	1	1	--------	--------	LXE2,LXE4,LXE8,PAE2,PXE8,PXM8,QAE2,QAE6,QXE4,QXE6,QXE7,QXE8 QXE9,QXEB,QXH9,SXE4,SXE7,SXE8,SXE9,SXEB,VAA8,VC2,VC2N,VDE2 VEP7,VK2,VKB2,VME2,VMS2,VN27,VNG2,VNS9,VXE2,VXE4,VXE6,VXE7 VXE8,VXE9,VXEB
3	31614-ZE2-003	BRACKET, CASE MOUNTING	1	1	1	1	--------	--------	LXE2,LXE4,LXE8,PAE2,PXE8,PXM8,QAE2,QAE6,QXE4,QXE6,QXE7,QXE8 QXE9,QXEB,QXH9,SXE4,SXE7,SXE8,SXE9,SXEB,VAA8,VC2,VC2N,VDE2 VEP7,VK2,VKB2,VME2,VMS2,VN27,VNG2,VNS9,VXE2,VXE4,VXE6,VXE7 VXE8,VXE9,VXEB
4	31615-ZE3-003ZE	PANEL COMP., CONTROL							
		R280.....POWER RED	1	1	1	1	--------	--------	LXE2,LXE4,LXE8,PAE2,PXE8,PXM8,QAE2,QAE6,QXE4,QXE6,QXE7,QXE8 QXE9,QXEB,QXH9,SXE4,SXE7,SXE8,SXE9,SXEB,VAA8,VC2,VC2N,VDE2 VEP7,VK2,VKB2,VN27,VXE2,VXE4,VXE6,VXE7,VXE8,VXE9,VXEB
	31615-ZE3-003ZA	*NH1*.....BLACK	1	1	1	-	--------	--------	PXE8,QAE2,VC2,VC2N,VN27,VNG2,VNS9,VXEB
	31615-ZE3-003ZD	*NH105*...MAT BLACK (#15-#20)	1	1	-	-	--------	--------	VDE2,VME2,VMS2,VXE2,VXE7,VXE9
	31615-ZE3-003ZC	*T39*.....GEKO BLUE	1	-	-	-	--------	--------	VNG2,VXEB
5	31700-124-008	RECTIFIER ASSY., SILICON (SHINDENGEN)	1	1	1	1	--------	--------	LXE2,LXE4,LXE8,PAE2,PXE8,PXM8,QAE2,QAE6,QXE4,QXE6,QXE7,QXE8 QXE9,QXEB,SXE4,SXE7,SXE8,SXE9,SXEB,VAA8,VC2,VC2N,VDE2,VEP7,VK2 VKB2,VME2,VMS2,VN27,VNG2,VNS9,VXE2,VXE4,VXE6,VXE7,VXE8,VXE9 VXEB
6	32127-738-700	SUSPENSION, COUPLER	1	1	1	1	--------	--------	LXE2,LXE4,LXE8,PAE2,PXE8,PXM8,QAE2,QAE6,QXE4,QXE6,QXE7,QXE8 QXE9,QXEB,SXE4,SXE7,SXE8,SXE9,SXEB,VAA8,VC2,VC2N,VDE2,VEP7,VK2 VKB2,VME2,VMS2,VN27,VNG2,VNS9,VXE2,VXE4,VXE6,VXE7,VXE8,VXE9 VXEB
7	32197-ZE1-003	HARNESS, SUB WIRE	1	1	-	-	--------	--------	LXE2,LXE4,LXE8,PAE2,PXE8,PXM8,QAE2,QAE6,QXE4,QXE6,QXE7,QXE8 QXE9,QXEB,QXH9,SXE4,SXE7,SXE8,SXE9,SXEB,VAA8,VC2,VC2N,VDE2 VEP7,VK2,VKB2,VME2,VMS2,VN27,VNG2,VNS9,VXE2,VXE4,VXE6,VXE7 VXE8,VXE9,VXEB
8	32902-892-003	BAND	1	1	1	1	--------	--------	LXE2,LXE4,LXE8,PAE2,PXE8,PXM8,QAE2,QAE6,QXE4,QXE6,QXE7,QXE8 QXE9,QXEB,QXH9,SXE4,SXE7,SXE8,SXE9,SXEB,VAA8,VC2,VC2N,VDE2 VEP7,VK2,VKB2,VME2,VMS2,VN27,VNG2,VNS9,VXE2,VXE4,VXE6,VXE7 VXE8,VXE9,VXEB
9	34150-ZH7-003	ALERT UNIT, OIL	1	-	-	-	--------	--------	LXE8,QXEB,SXE7,SXE8,SXE9,SXEB,VEP7,VME2,VMS2,VNG2,VXE8,VXEB
	34150-ZH7-013	.....	1	-	-	-	--------	--------	VC2N
	34150-ZH7-003	.....	1	-	-	-	--------	1419413	LXE2,LXE4,PAE2,PXE8,QAE2,QAE6,QXE4,QXE6,QXE7,QXE8,QXE9,SXE4 VAA8,VC2,VDE2,VK2,VKB2,VN27,VNS9,VXE2,VXE4,VXE6,VXE7,VXE9
	34150-ZH7-013	.....	1	-	-	-	1419414	--------	LXE2,LXE4,PAE2,PXE8,QAE2,QAE6,QXE4,QXE6,QXE7,QXE8,QXE9,SXE4 VAA8,VC2,VDE2,VK2,VKB2,VN27,VNS9,VXE2,VXE4,VXE6,VXE7,VXE9
			-	1	-	-	--------	--------	PXM8,VAA8,VC2,VDE2,VK2,VKB2,VNS9
10	35100-ZE2-023	SWITCH ASSY., COMBINATION ...	1	-	-	-	--------	--------	LXE8,QXEB,SXE7,SXE8,SXE9,SXEB,VEP7,VME2,VMS2,VXE8,VXEB
	35100-ZE2-033	.....	1	-	-	-	--------	--------	VC2N
	35100-ZE2-842	SWITCH ASSY., COMBINATION (3A-CHARGE)	1	-	-	-	--------	--------	VNG2
	35100-ZE2-023	SWITCH ASSY., COMBINATION ...	1	-	-	-	--------	1416882	LXE2,LXE4,PXE8,QXE4,QXE6,QXE7,QXE8,QXE9,SXE4,VAA8,VC2,VDE2 VKB2,VXE2,VXE4,VXE6,VXE7,VXE9
	35100-ZE2-842	SWITCH ASSY., COMBINATION (3A-CHARGE)	1	-	-	-	--------	1419413	PAE2,QAE2,QAE6,VK2,VN27,VNS9

CONTROL BOX(1)

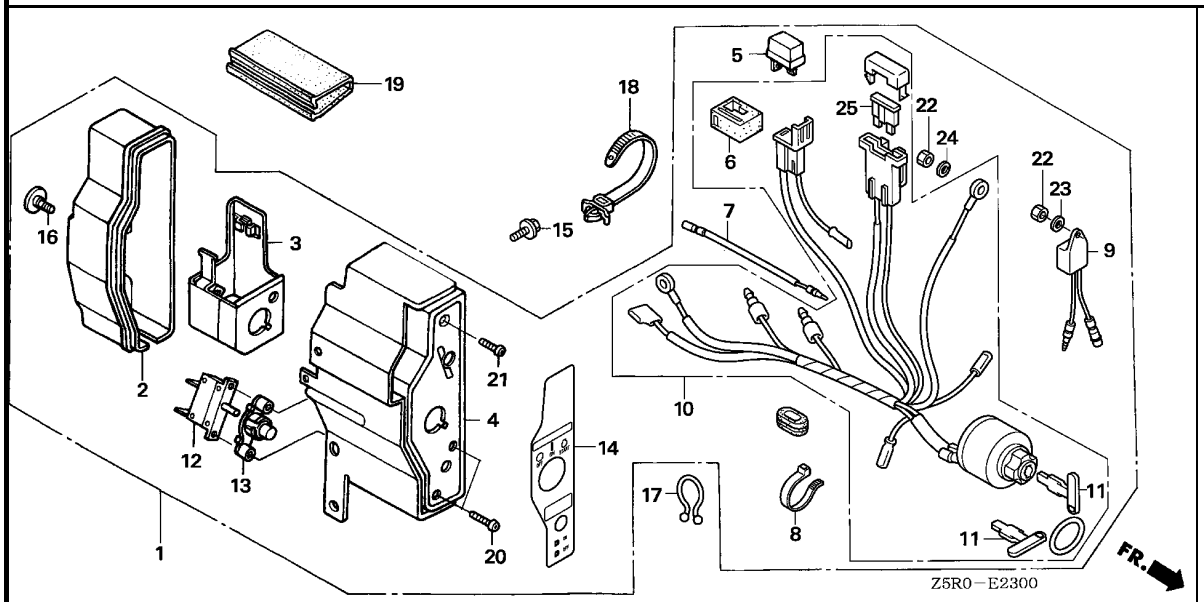

Ref. No.	Part No.	Description	Reqd. QTY GX 390 U1	GX 390 R1	GX 390 U2	GX 390 R2	Serial No.		Parts catalogue code
10)	35100-ZE2-033	SWITCH ASSY., COMBINATION ···	1	-	-	-	1416883	--------	LXE2,LXE4,PXE8,QXE4,QXE6,QXE7,QXE8,QXE9,SXE4,VAA8,VC2,VDE2 VKB2,VXE2,VXE4,VXE6,VXE7,VXE9
	35100-ZE2-843	SWITCH ASSY., COMBINATION (3A-CHARGE)	1	-	-	-	1419414	--------	PAE2,QAE2,QAE6,VK2,VN27,VNS9
	35100-ZE2-033	SWITCH ASSY., COMBINATION ···	-	1	-	-	--------	--------	PXM8,VAA8,VC2,VDE2,VKB2
	35100-ZE2-843	SWITCH ASSY., COMBINATION (3A-CHARGE)	-	1	-	-	--------	--------	VK2,VNS9
	35100-Z5T-811	SWITCH ASSY., COMBINATION ···	-	-	1	1	--------	--------	PXE8,PXM8,QXE8,SXE4
11	35111-880-013	KEY COMP. ·····	2	2	2	2	--------	--------	LXE2,LXE4,LXE8,PAE2,PXE8,PXM8,QAE2,QAE6,QXE4,QXE6,QXE7,QXE8 QXE9,QXEB,QXH9,SXE4,SXE7,SXE8,SXE9,SXEB,VAA8,VC2,VC2N,VDE2 VEP7,VK2,VKB2,VME2,VMS2,VN27,VNG2,VNS9,VXE2,VXE4,VXE6,VXE7 VXE8,VXE9,VXEB
12	38240-VA3-900	PROTECTOR, CIRCUIT(1.0A) ····	1	1	1	1	--------	--------	LXE2,LXE4,LXE8,PXE8,PXM8,QXE4,QXE6,QXE7,QXE8,QXE9,QXEB,SXE4 SXE7,SXE8,SXE9,SXEB,VAA8,VC2,VC2N,VDE2,VEP7,VKB2,VME2,VMS2 VXE2,VXE4,VXE6,VXE7,VXE8,VXE9,VXEB
	38240-ZE2-840	PROTECTOR, CIRCUIT(3.5A) ····	1	1	-	-	--------	--------	PAE2,QAE2,QAE6,VK2,VN27,VNG2,VNS9
13	38250-ZA8-701	LENS ASSY., PROTECTOR ·····	1	1	1	1	--------	--------	LXE2,LXE4,LXE8,PAE2,PXE8,PXM8,QAE2,QAE6,QXE4,QXE6,QXE7,QXE8 QXE9,QXEB,SXE4,SXE7,SXE8,SXE9,SXEB,VAA8,VC2,VC2N,VDE2,VEP7,VK2 VKB2,VME2,VMS2,VN27,VNG2,VNS9,VXE2,VXE4,VXE6,VXE7,VXE8,VXE9 VXEB
14	87529-Z4T-840	MARK, CONTROL BOX(EXTERNAL) ·	1	1	1	1	--------	--------	LXE2,LXE4,LXE8,PAE2,PXE8,PXM8,QAE2,QAE6,QXE4,QXE6,QXE7,QXE8 QXE9,QXEB,SXE4,SXE7,SXE8,SXE9,SXEB,VAA8,VC2,VC2N,VDE2,VEP7,VK2 VKB2,VME2,VMS2,VN27,VNG2,VNS9,VXE2,VXE4,VXE6,VXE7,VXE8,VXE9 VXEB
15	90013-883-000	BOLT, FLANGE, 6X12(CT200) ···	2	2	2	2	--------	--------	LXE2,LXE4,LXE8,PAE2,PXE8,PXM8,QAE2,QAE6,QXE4,QXE6,QXE7,QXE8 QXE9,QXEB,SXE4,SXE7,SXE8,SXE9,SXEB,VAA8,VC2,VC2N,VDE2,VEP7,VK2 VKB2,VME2,VMS2,VN27,VNG2,VNS9,VXE2,VXE4,VXE6,VXE7,VXE8,VXE9 VXEB

CONTROL BOX(1)

Ref. No.	Part No.	Description	Reqd. QTY GX 390 U1	GX 390 R1	GX 390 U2	GX 390 R2	Serial No.		Parts catalogue code
16	90380-MA6-010	SCREW, SPECIAL, 6X12	1	1	1	1	--------	--------	LXE2,LXE4,LXE8,PAE2,PXE8,PXM8,QAE2,QAE6,QXE4,QXE6,QXE7,QXE8 QXE9,QXEB,QXH9,SXE4,SXE7,SXE8,SXE9,SXEB,VAA8,VC2,VC2N,VDE2 VEP7,VK2,VKB2,VME2,VMS2,VN27,VNG2,VNS9,VXE2,VXE4,VXE6,VXE7 VXE8,VXE9,VXEB
17	90630-751-000	CLIP, PURSE LOCK	1	1	1	1	--------	--------	LXE2,LXE4,LXE8,PAE2,PXE8,PXM8,QAE2,QAE6,QXE4,QXE6,QXE7,QXE8 QXE9,QXEB,QXH9,SXE4,SXE7,SXE8,SXE9,SXEB,VAA8,VC2,VC2N,VDE2 VEP7,VK2,VKB2,VME2,VMS2,VN27,VNG2,VNS9,VXE2,VXE4,VXE6,VXE7 VXE8,VXE9,VXEB
18	90672-SA0-003	STRAP, CABLE, 118MM(BLACK)	1	1	1	1	--------	--------	LXE2,LXE4,LXE8,PAE2,PXE8,PXM8,QAE2,QAE6,QXE4,QXE6,QXE7,QXE8 QXE9,QXEB,QXH9,SXE4,SXE7,SXE8,SXE9,SXEB,VAA8,VC2,VC2N,VDE2 VEP7,VK2,VKB2,VME2,VMS2,VN27,VNG2,VNS9,VXE2,VXE4,VXE6,VXE7 VXE8,VXE9,VXEB
19	91406-ZE2-003	TUBE, FASTENER, 30MM	1	1	1	1	--------	--------	LXE2,LXE4,LXE8,PAE2,PXE8,PXM8,QAE2,QAE6,QXE4,QXE6,QXE7,QXE8 QXE9,QXEB,QXH9,SXE4,SXE7,SXE8,SXE9,SXEB,VAA8,VC2,VC2N,VDE2 VEP7,VK2,VKB2,VME2,VMS2,VN27,VNG2,VNS9,VXE2,VXE4,VXE6,VXE7 VXE8,VXE9,VXEB
20	93500-03012-0H	SCREW, PAN, 3X12	2	2	2	2	--------	--------	LXE2,LXE4,LXE8,PAE2,PXE8,PXM8,QAE2,QAE6,QXE4,QXE6,QXE7,QXE8 QXE9,QXEB,SXE4,SXE7,SXE8,SXE9,SXEB,VAA8,VC2,VC2N,VDE2,VEP7,VK2 VKB2,VME2,VMS2,VN27,VNG2,VNS9,VXE2,VXE4,VXE6,VXE7,VXE8,VXE9 VXEB
21	93500-04012-0H	SCREW, PAN, 4X12	1	1	-	-	--------	--------	LXE2,LXE4,LXE8,PAE2,PXE8,PXM8,QAE2,QAE6,QXE4,QXE6,QXE7,QXE8 QXE9,QXEB,QXH9,SXE4,SXE7,SXE8,SXE9,SXEB,VAA8,VC2,VC2N,VDE2 VEP7,VK2,VKB2,VME2,VMS2,VN27,VNG2,VNS9,VXE2,VXE4,VXE6,VXE7 VXE8,VXE9,VXEB
22	94001-04390-0S	NUT, HEX., 4MM	2	2	-	-	--------	--------	LXE2,LXE4,LXE8,PAE2,PXE8,PXM8,QAE2,QAE6,QXE4,QXE6,QXE7,QXE8 QXE9,QXEB,QXH9,SXE4,SXE7,SXE8,SXE9,SXEB,VAA8,VC2,VC2N,VDE2 VEP7,VK2,VKB2,VME2,VMS2,VN27,VNG2,VNS9,VXE2,VXE4,VXE6,VXE7 VXE8,VXE9,VXEB
23	94101-04800	WASHER, PLAIN, 4MM	1	1	-	-	--------	--------	LXE2,LXE4,LXE8,PAE2,PXE8,PXM8,QAE2,QAE6,QXE4,QXE6,QXE7,QXE8 QXE9,QXEB,QXH9,SXE4,SXE7,SXE8,SXE9,SXEB,VAA8,VC2,VC2N,VDE2 VEP7,VK2,VKB2,VME2,VMS2,VN27,VNG2,VNS9,VXE2,VXE4,VXE6,VXE7 VXE8,VXE9,VXEB
24	94111-04800	WASHER, SPRING, 4MM	1	1	-	-	--------	--------	LXE2,LXE4,LXE8,PAE2,PXE8,PXM8,QAE2,QAE6,QXE4,QXE6,QXE7,QXE8 QXE9,QXEB,QXH9,SXE4,SXE7,SXE8,SXE9,SXEB,VAA8,VC2,VC2N,VDE2 VEP7,VK2,VKB2,VME2,VMS2,VN27,VNG2,VNS9,VXE2,VXE4,VXE6,VXE7 VXE8,VXE9,VXEB
25	98200-30500	FUSE, BLADE(5A)	1	1	1	1	--------	--------	LXE2,LXE4,LXE8,PXE8,PXM8,QXE4,QXE6,QXE7,QXE8,QXE9,QXEB,SXE4 SXE7,SXE8,SXE9,SXEB,VAA8,VC2,VC2N,VDE2,VEP7,VKB2,VME2,VMS2 VXE2,VXE4,VXE6,VXE7,VXE8,VXE9,VXEB
	98200-31500	FUSE, BLADE(15A)	1	1	-	-	--------	--------	PAE2,QAE2,QAE6,VK2,VN27,VNG2,VNS9

CONTROL BOX(2)

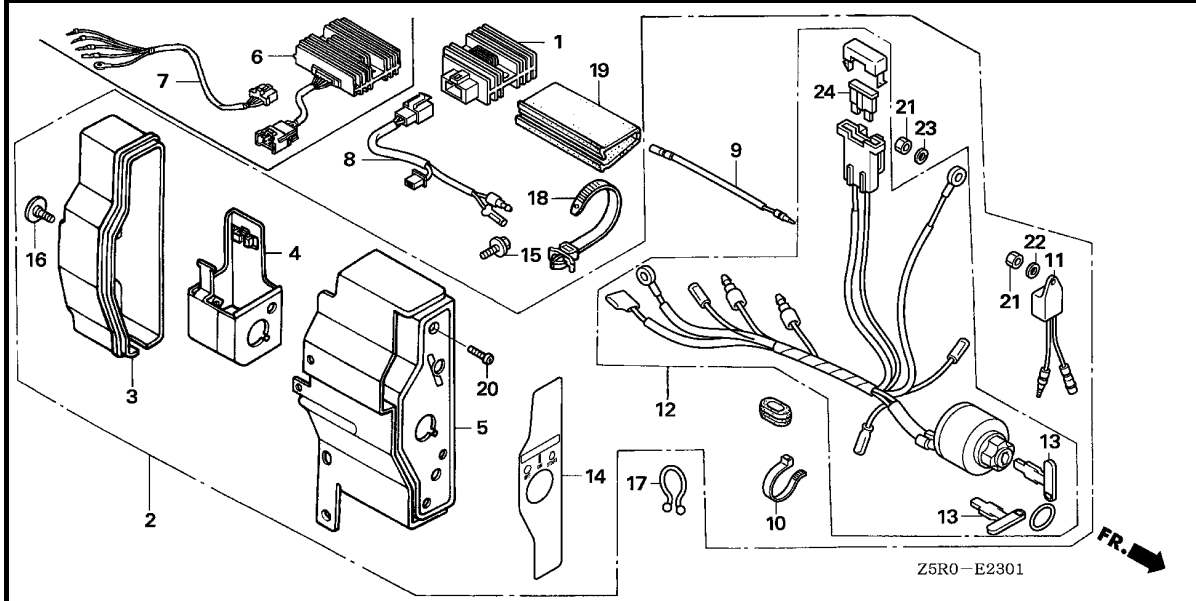

Ref. No.	L.O.N.	(Relative ref. Number) Description	F.R.T.

Ref. No.	Part No.	Description	Reqd. QTY GX 390 U1	GX 390 R1	GX 390 U2	GX 390 R2	Serial No.		Parts catalogue code
1	31600-ZE2-861	RECTIFIER ASSY., REGULATOR (10A)	1	1	-	-	--------	--------	LKE,QKA4,QMEO,QNB2,QNE2,QNE6,QNE8,QNE9,QNK,QTR2,QXH9,SCK4,SM32 SM34,SMEO,STC4
2	31610-Z5S-821ZB	BOX ASSY., CONTROL(EXP-ALERT) (10A)							
		R280.....POWER RED	1	-	-	-	--------	--------	QXH9,SM34
	31610-Z5S-821ZA	*NH1*.....BLACK	1	-	-	-	--------	--------	SM34
	31610-ZE3-W42ZD	BOX ASSY., CONTROL(EXP-ALERT) (18A)							
		R280.....POWER RED	1	-	-	-	--------	1034001	QND,QNR2,QNR6
	31610-ZE3-W42ZA	*NH1*.....BLACK	1	-	-	-	--------	1034001	QND,QNR2,QWH2
	31610-ZE3-W33ZD	BOX ASSY., CONTROL(EXP-ALERT) (10A)							
		R280.....POWER RED	1	-	-	-	--------	1034033	LKE,QKA4,QMEO,QNE2,QNE6,QNE8,QNE9,QSC2,SCK4,SM32,SMEO,STC4
	31610-ZE3-W33ZA	*NH1*.....BLACK	1	-	-	-	--------	1034033	QNE9,SM32
	31610-Z5R-821ZB	BOX ASSY., CONTROL(EXP-ALERT) (18A)							
		R280.....POWER RED	1	-	-	-	1034002	--------	QND,QNR2,QNR6
	31610-Z5R-821ZA	*NH1*.....BLACK	1	-	-	-	1034002	--------	QND,QNR2,QWH2
	31610-Z5S-821ZB	BOX ASSY., CONTROL(EXP-ALERT) (10A)							
		R280.....POWER RED	1	-	-	-	1034034	--------	LKE,QKA4,QMEO,QNE2,QNE6,QNE8,QNE9,QSC2,SCK4,SM32,SMEO,STC4
	31610-Z5S-821ZA	*NH1*.....BLACK	1	-	-	-	1034034	--------	QNE9,SM32
	31610-Z5T-831ZA	BOX ASSY., CONTROL(10A)							
		NH1.....BLACK	-	-	1	-	--------	--------	SM32,SM34
	31610-Z5T-831ZB	*R280*.....POWER RED	-	-	1	-	--------	--------	SM32,SM34
3	31612-ZE2-003	CASE, CONTROL	1	-	1	-	--------	--------	LKE,QKA4,QMEO,QND,QNE2,QNE6,QNE8,QNE9,QNR2,QNR6,QSC2,QWH2,QXH9 SCK4,SM32,SM34,SMEO,STC4

CONTROL BOX(2)

Ref. No.	Part No.	Description	Reqd. QTY GX 390 U1	GX 390 R1	GX 390 U2	GX 390 R2	Serial No.		Parts catalogue code
4	31614-ZE2-003	BRACKET, CASE MOUNTING ·····	1	-	1	-	--------	--------	LKE,QKA4,QMEO,QND,QNE2,QNE6,QNE8,QNE9,QNR2,QNR6,QSC2,QWH2,QXH9 SCK4,SM32,SM34,SMEO,STC4
5	31615-ZE3-003ZE	PANEL COMP., CONTROL *R280*.....POWER RED	1	-	1	-	--------	--------	LKE,QKA4,QMEO,QND,QNE2,QNE6,QNE8,QNE9,QNR2,QNR6,QSC2,QXH9,SCK4 SM32,SM34,SMEO,STC4
	31615-ZE3-003ZA	*NH1*.....BLACK	1	-	1	-	--------	--------	QND,QNE9,QNR2,QWH2,SM32,SM34
6	31620-ZG5-013	RECTIFIER ASSY., REGULATOR (20A)	1	-	-	-	--------	1384342	QNR2,QNR6,QWH2
	31620-ZG5-023	·····	1	-	-	-	1384343	1485597	QNR2,QNR6,QWH2
	31620-ZG5-033	·····	1	-	-	-	1485598	--------	QNR2,QNR6,QWH2
7	32110-ZE2-W00	HARNESS ASSY., SUB WIRE ·····	1	-	-	-	--------	--------	QNR2,QNR6,QWH2
8	32110-ZE2-860	HARNESS ASSY., SUB WIRE ·····	1	1	-	-	--------	--------	LKE,QKA4,QMEO,QNB2,QNE2,QNE6,QNE8,QNE9,QNK,QSC2,QXH9,SCK4,SM32 SM34,SMEO,STC4
9	32197-ZE1-003	HARNESS, SUB WIRE ·····	1	-	-	-	--------	--------	LKE,QKA4,QMEO,QND,QNE2,QNE6,QNE8,QNE9,QNR2,QNR6,QSC2,QWH2,QXH9 SCK4,SM32,SM34,SMEO,STC4
10	32902-892-003	BAND ·····	1	-	1	-	--------	--------	LKE,QKA4,QMEO,QND,QNE2,QNE6,QNE8,QNE9,QNR2,QNR6,QSC2,QWH2,QXH9 SCK4,SM32,SM34,SMEO,STC4
11	34150-ZH7-003	ALERT UNIT, OIL ·····	1	-	-	-	--------	--------	QNE9
	34150-ZH7-013	·····	1	-	-	-	--------	--------	SM34
	34150-ZH7-003	·····	1	-	-	-	--------	1419413	LKE,QKA4,QMEO,QND,QNE2,QNE6,QNE8,QNR2,QNR6,QSC2,QWH2,QXH9,SCK4 SM32,SMEO,STC4
	34150-ZH7-013	·····	1	-	-	-	1419414	--------	LKE,QKA4,QMEO,QND,QNE2,QNE6,QNE8,QNR2,QNR6,QSC2,QWH2,QXH9,SCK4 SM32,SMEO,STC4
12	35100-ZE2-862	SWITCH ASSY., COMBINATION (10A-CHARGE)	1	-	-	-	--------	--------	LKE,QKA4,QMEO,QNE2,QNE6,QNE8,QNE9,QSC2,QXH9,SCK4,SM32,SM34 SMEO,STC4
	35100-ZE2-W01	SWITCH ASSY., COMBINATION (18A-CHARGE)	1	-	-	-	--------	--------	QND,QNR2,QNR6,QWH2
	35100-Z5T-831	SWITCH ASSY., COMBINATION(10A)	-	-	1	-	--------	--------	SM32,SM34
13	35111-880-013	KEY COMP. ·····	2	-	2	-	--------	--------	LKE,QKA4,QMEO,QND,QNE2,QNE6,QNE8,QNE9,QNR2,QNR6,QSC2,QWH2,QXH9 SCK4,SM32,SM34,SMEO,STC4
14	87529-Z4S-820	MARK, CONTROL BOX(EXP) ·····	1	-	-	-	--------	--------	QXH9,SM34
	87529-ZE2-861	MARK, CONTROL BOX (EXTERNAL-REGULATOR)	1	-	-	-	--------	1034001	LKE,QKA4,QMEO,QND,QNE2,QNE6,QNE8,QNR2,QNR6,QSC2,QWH2,SCK4,SMEO STC4
			1	-	-	-	--------	1034033	QNE9,SM32
	87529-Z4S-820	MARK, CONTROL BOX(EXP) ·····	1	-	-	-	1034002	--------	LKE,QKA4,QMEO,QND,QNE2,QNE6,QNE8,QNR2,QNR6,QSC2,QWH2,SCK4,SMEO STC4
			1	-	-	-	1034034	--------	QNE9,SM32
			-	-	1	-	--------	--------	SM32,SM34
15	90013-883-000	BOLT, FLANGE, 6X12(CT200) ···	2	-	2	-	--------	--------	LKE,QKA4,QMEO,QND,QNE2,QNE6,QNE8,QNE9,QNR2,QNR6,QSC2,QWH2,QXH9 SCK4,SM32,SM34,SMEO,STC4
16	90380-MA6-010	SCREW, SPECIAL, 6X12 ·····	1	-	1	-	--------	--------	LKE,QKA4,QMEO,QND,QNE2,QNE6,QNE8,QNE9,QNR2,QNR6,QSC2,QWH2,QXH9 SCK4,SM32,SM34,SMEO,STC4
17	90630-751-000	CLIP, PURSE LOCK ·····	1	-	1	-	--------	--------	LKE,QKA4,QMEO,QND,QNE2,QNE6,QNE8,QNE9,QNR2,QNR6,QSC2,QWH2,QXH9 SCK4,SM32,SM34,SMEO,STC4
18	90672-SA0-003	STRAP, CABLE, 118MM(BLACK) ··	1	-	1	-	--------	--------	LKE,QKA4,QMEO,QND,QNE2,QNE6,QNE8,QNE9,QNR2,QNR6,QSC2,QWH2,QXH9 SCK4,SM32,SM34,SMEO,STC4
19	91406-ZE2-003	TUBE, FASTENER, 30MM ·····	1	-	1	-	--------	--------	LKE,QKA4,QMEO,QND,QNE2,QNE6,QNE8,QNE9,QNR2,QNR6,QSC2,QWH2,QXH9 SCK4,SM32,SM34,SMEO,STC4
20	93500-04012-0H	SCREW, PAN, 4X12 ·····	1	-	1	-	--------	--------	LKE,QKA4,QMEO,QND,QNE2,QNE6,QNE8,QNE9,QNR2,QNR6,QSC2,QWH2,QXH9 SCK4,SM32,SM34,SMEO,STC4
21	94001-04390-0S	NUT, HEX., 4MM ·····	2	-	1	-	--------	--------	LKE,QKA4,QMEO,QND,QNE2,QNE6,QNE8,QNE9,QNR2,QNR6,QSC2,QWH2,QXH9 SCK4,SM32,SM34,SMEO,STC4

CONTROL BOX(2)

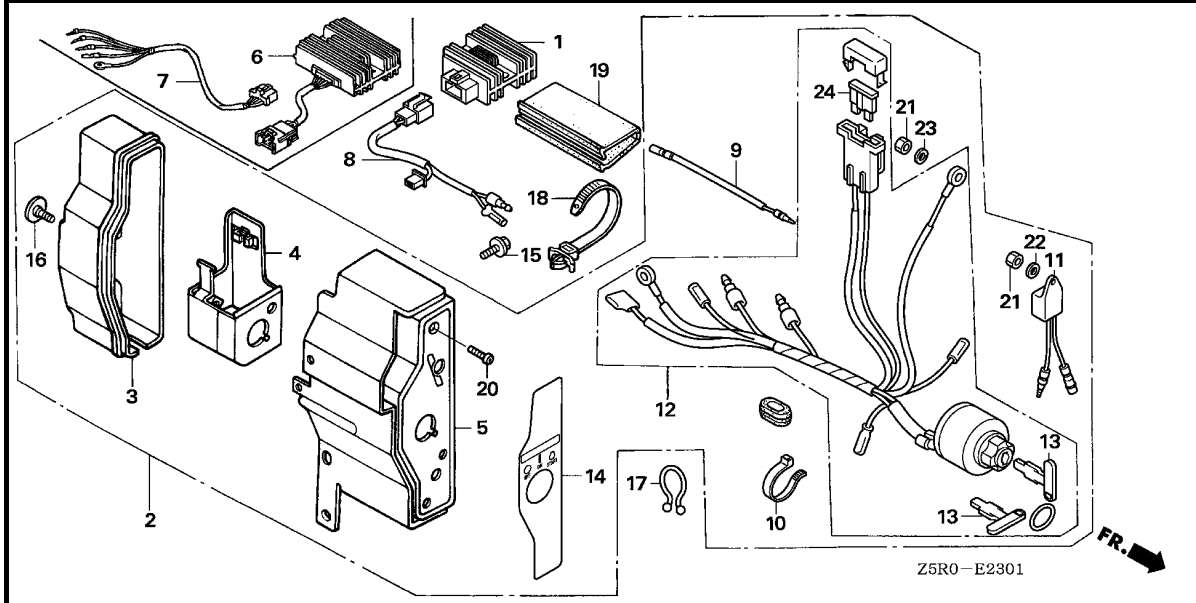

Ref. No.	Part No.	Description	Reqd. QTY GX 390 U1	GX 390 R1	GX 390 U2	GX 390 R2	Serial No.		Parts catalogue code
22	94101-04800	WASHER, PLAIN, 4MM	1	-	-	-	--------	--------	LKE,QKA4,QMEO,QND,QNE2,QNE6,QNE8,QNE9,QNR2,QNR6,QSC2,QWH2,QXH9 SCK4,SM32,SM34,SMEO,STC4
23	94111-04800	WASHER, SPRING, 4MM	1	-	1	-	--------	--------	LKE,QKA4,QMEO,QND,QNE2,QNE6,QNE8,QNE9,QNR2,QNR6,QSC2,QWH2,QXH9 SCK4,SM32,SM34,SMEO,STC4
24	98200-31500	FUSE, BLADE(15A)	1	-	1	-	--------	--------	LKE,QKA4,QMEO,QNE2,QNE6,QNE8,QNE9,QSC2,QXH9,SCK4,SM32,SM34 SMEO,STC4
	98200-32500	FUSE, BLADE(25A)	1	-	-	-	--------	--------	QND,QNR2,QNR6,QWH2

REDUCTION(1)

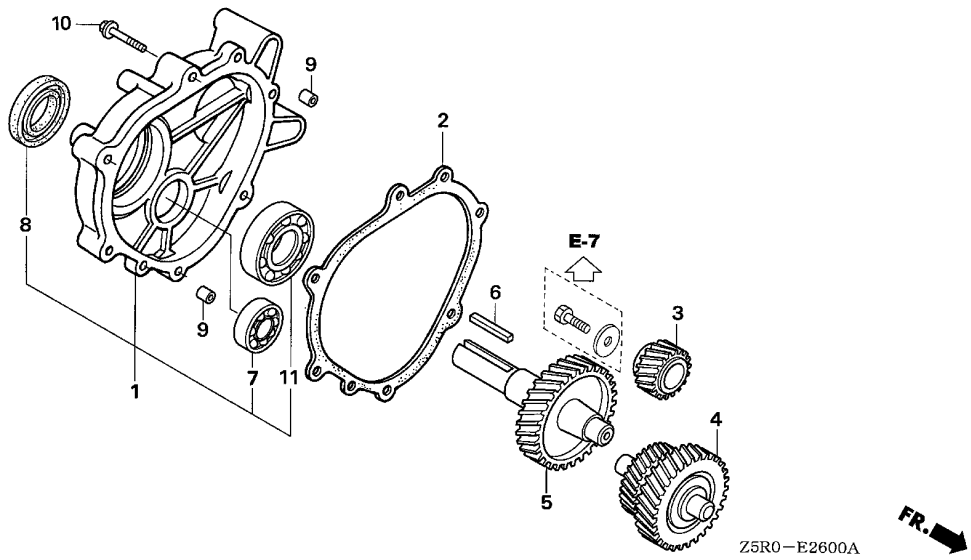

Ref. No.	L.O.N.	(Relative ref. Number) Description	F.R.T.

Ref. No.	Part No.	Description	Reqd. QTY GX 390 U1	GX 390 R1	GX 390 U2	GX 390 R2	Serial No.		Parts catalogue code
1	11500-ZE3-611	COVER ASSY., GEAR CASE ·····	1	-	-	-	--------	--------	LKE,LX2,LXE2,LXE4,LXE8,LXQ4,LXU
2	11521-ZE2-800	PACKING, CHAIN CASE COVER ···	1	-	-	-	--------	--------	LKE,LX2,LXE2,LXE4,LXE8,LXQ4,LXU
3	22103-ZE3-610	GEAR, PRIMARY DRIVE(22T) ····	1	-	-	-	--------	--------	LKE,LX2,LXE2,LXE4,LXE8,LXQ4,LXU
4	23220-ZE3-610	COUNTERSHAFT COMP.(21T/27T) ·	1	-	-	-	--------	--------	LKE,LX2,LXE2,LXE4,LXE8,LXQ4,LXU
5	23710-ZE3-610	SHAFT, P.T.O.(33T) ·····	1	-	-	-	--------	--------	LKE,LX2,LXE2,LXE4,LXE8,LXQ4,LXU
6	90741-805-000	KEY, 7X7X33 ·····	1	-	-	-	--------	--------	LKE,LX2,LXE2,LXE4,LXE8,LXQ4,LXU
	90741-889-810	KEY, 7X7X33(YELLOW)(O/S) ····	(1)	-	-	-	--------	--------	LKE,LX2,LXE2,LXE4,LXE8,LXQ4,LXU
7	91009-KJ1-003	BEARING, RADIAL BALL, 6202 (NTN)	1	-	-	-	--------	--------	LKE,LX2,LXE2,LXE4,LXE8,LXQ4,LXU
8	91201-890-003	OIL SEAL, 30X46X8 ·····	1	-	-	-	--------	--------	LKE,LX2,LXE2,LXE4,LXE8,LXQ4,LXU
9	94301-08140	DOWEL PIN, 8X14 ·····	2	-	-	-	--------	--------	LKE,LX2,LXE2,LXE4,LXE8,LXQ4,LXU
10	95701-08040-00	BOLT, FLANGE, 8X40 ·····	6	-	-	-	--------	--------	LKE,LX2,LXE2,LXE4,LXE8,LXQ4,LXU
11	96100-62060-00	BEARING, RADIAL BALL, 6206 ··	1	-	-	-	--------	--------	LKE,LX2,LXE2,LXE4,LXE8,LXQ4,LXU

REDUCTION(2)

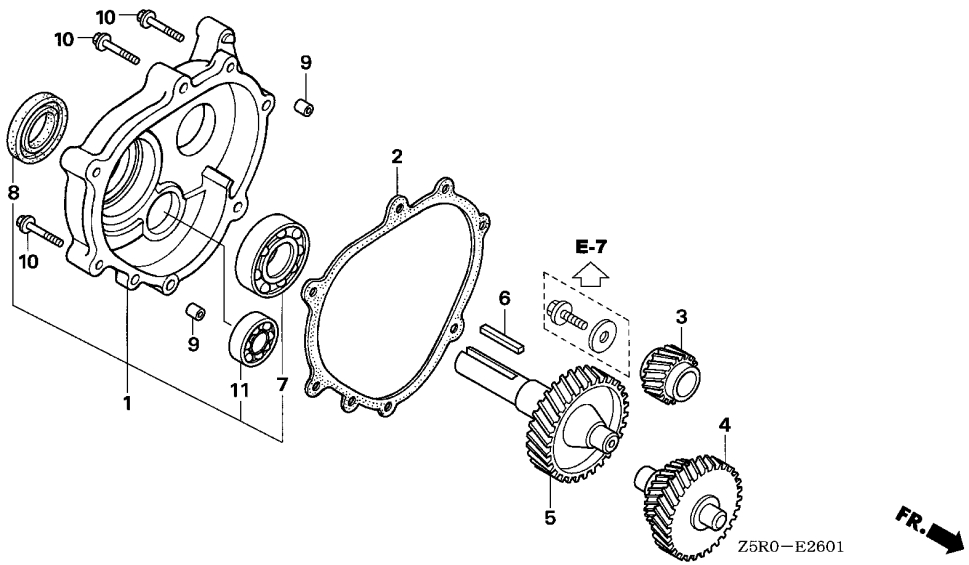

Ref. No.	L.O.N.	(Relative ref. Number) Description	F.R.T.

Ref. No.	Part No.	Description	Reqd. QTY GX 390 U1	GX 390 R1	GX 390 U2	GX 390 R2	Serial No.		Parts catalogue code
1	11500-ZE3-640	COVER ASSY., GEAR CASE ·····	1	-	-	-	--------	--------	HA2,HJA2
2	11521-ZE2-800	PACKING, CHAIN CASE COVER ···	1	-	-	-	--------	--------	HA2,HJA2
3	22103-ZE3-640	GEAR, PRIMARY DRIVE(12T) ····	1	-	-	-	--------	--------	HA2,HJA2
4	23220-ZE3-640	COUNTERSHAFT COMP.(13T/27T) ·	1	-	-	-	--------	--------	HA2,HJA2
5	23710-ZE3-640	SHAFT, P.T.O.(34T) ·····	1	-	-	-	--------	--------	HA2
	23710-ZF6-U50	SHAFT, P.T.O. ·····	1	-	-	-	--------	--------	HJA2
6	90745-ZE2-600	KEY, 6.3X6.3X43 ·····	1	-	-	-	--------	--------	HA2,HJA2
7	91006-MT3-003	BEARING, RADIAL BALL, 6206 (NTN)	1	-	-	-	--------	--------	HA2,HJA2
8	91201-890-003	OIL SEAL, 30X46X8 ·····	1	-	-	-	--------	--------	HA2,HJA2
9	94301-08140	DOWEL PIN, 8X14 ·····	2	-	-	-	--------	--------	HA2,HJA2
10	95701-08040-00	BOLT, FLANGE, 8X40 ·····	6	-	-	-	--------	--------	HA2,HJA2
11	96100-63020-00	BEARING, RADIAL BALL, 6302 ··	1	-	-	-	--------	--------	HA2,HJA2

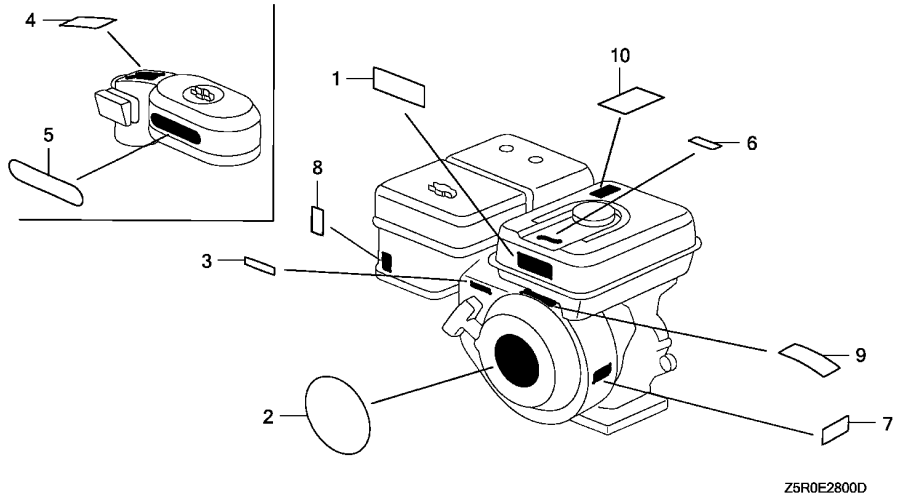

Ref. No.	L.O.N.	(Relative ref. Number) Description	F.R.T.

Ref. No.	Part No.	Description	Reqd. QTY GX 390 U1	GX 390 R1	GX 390 U2	GX 390 R2	Serial No.		Parts catalogue code
1	87516-ZH7-810	MARK, OPERATOR CAUTION (PICTOGRAPH)(MADE IN JAPAN)	(1)	(1)	-	-	--------	1626671	ED6,EDD2,HA2,HJA2,LKE,LX2,LXE2,LXE4,LXE8,LXQ4,LXU,PA2,PAE2 PXE8,PXU,QA2,QA26,QAA2,QAE2,QAE6,QAW,QC2,QDW9,QE,QHB4,QK4,QKA4 QMEO,QND,QNE2,QNE6,QNE8,QNE9,QNK,QNR2,QNR6,QSC2,QWA4,QWC4,QWH2 QWT2,QXB,QXB7,QXB9,QXC4,QXC6,QXC9,QXE4,QXE6,QXE7,QXE8,QXE9 QXEB,QXH9,QXQ4,QXQ7,QXS4,QXU,SCK4,SHQ4,SM32,SMC1,SMD3,SMEO SME6,SMX2,SNC,STC4,SWA4,SXB,SXB7,SXB9,SXE4,SXE7,SXE8,SXE9,SXEB SXQ4,SXU,VA2,VEP7,VM2,VMA2,VME2,VSD,VSD7,VSD9,VX8,VXB,VXB7 VXB9,VXE2,VXE4,VXE6,VXE7,VXE8,VXE9,VXEB,VXP7,VXQ4
	87516-ZH7-000	MARK, OPERATOR CAUTION (ENGLISH)(MADE IN JAPAN)	1	1	-	-	--------	1626671	ED6,EDD2,HA2,HJA2,LKE,LX2,LXE2,LXE4,LXQ4,PA2,PAE2,PXE8,PXU,QA2 QAE2,QAE6,QAW,QC2,QDW9,QE,QHB4,QKA4,QMEO,QND,QNE2,QNE6,QNE8 QNK,QNR2,QNR6,QSC2,QWH2,QWT2,QXB7,QXB9,QXC4,QXC6,QXC9,QXE4 QXE6,QXE7,QXE8,QXE9,QXH9,QXQ4,QXQ7,QXU,SCK4,SHQ4,SM32,SMC1 SMD3,SMEO,SME6,SMX2,SNC,STC4,SXB,SXB7,SXB9,SXE4,SXU,VA2,VM2 VSD,VSD7,VSD9,VXB,VXB7,VXB9,VXE2,VXE4,VXE6,VXE7,VXE9,VXQ4
	87516-ZH7-010	----------	1	1	-	-	1626672	--------	ED6,EDD2,HA2,HJA2,LKE,LX2,LXE2,LXE4,LXQ4,PA2,PAE2,PXE8,PXU,QA2 QAE2,QAE6,QAW,QC2,QDW9,QE,QHB4,QKA4,QMEO,QND,QNE2,QNE6,QNE8 QNK,QNR2,QNR6,QSC2,QWA4,QWC4,QWH2,QWT2,QXB7,QXB9,QXC4,QXC6 QXC9,QXE4,QXE6,QXE7,QXE8,QXE9,QXH9,QXQ4,QXQ7,QXU,SCK4,SHQ4 SM32,SMC1,SMD3,SMEO,SME6,SMX2,SNC,STC4,SXB,SXB7,SXB9,SXE4,SXU VA2,VM2,VN27,VSD,VSD7,VSD9,VXB,VXB7,VXB9,VXE2,VXE4,VXE6,VXE7 VXE9,VXQ4
	87519-ZH7-000	MARK, OPERATOR CAUTION (PICTOGRAPH)	1	-	1	-	--------	--------	PXU4,SM34,SMX4

LABEL

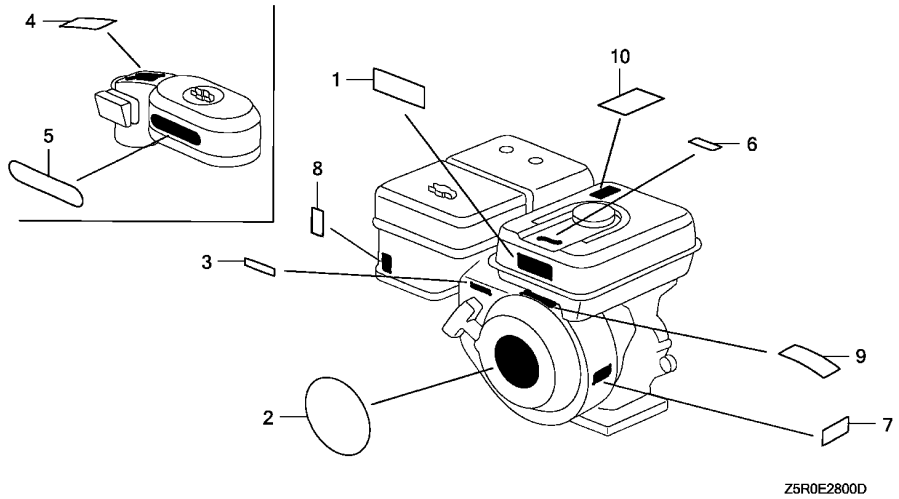

Ref. No.	Part No.	Description	Reqd. QTY GX 390 U1	GX 390 R1	GX 390 U2	GX 390 R2	Serial No.		Parts catalogue code
(1)	87516-ZH7-000	MARK, OPERATOR CAUTION (ENGLISH)(MADE IN JAPAN)	1	-	-	-	--------	--------	LXE8,LXU,QA26,QAA2,QNE9,QXB,QXEB,SXE7,SXE8,SXE9,SXEB,SXQ4,VMA2 VME2,VX8,VXE8,VXEB
			1	-	-	-	1412957	1626671	VN27
			1	-	-	-	1451030	1626671	QWA4,QWC4
	87516-ZH7-010	.....	-	-	1	-	--------	--------	PXE8,PXU,QXE8,QXU,SM32,SMX2,SXE4
2	87521-ZF6-W04	EMBLEM(HONDA GX390)	1	-	-	-	--------	--------	PXU4,QHB4,SM34,SMX4,VC2N
	87521-ZF6-W03	EMBLEM(GX390 HONDA 13.0)	1	-	-	-	--------	1398206	ED6,EDD2,EDS2,EDS6,EDT6,EN6,ENT2,HA2,HJA2,LX2,LXE2,LXE4,LXE8 LXQ4,LXU,PA2,PAE2,PXE8,PXU,QA2,QA26,QAA2,QAE2,QAE6,QAW,QC2 QDW9,QE,QK4,QKA4,QKB2,QMEO,QNB2,QND,QNE2,QNE6,QNE8,QNE9,QNK QNR2,QNR6,QSC2,QWA2,QWA4,QWC4,QWH2,QWT2,QXB,QXB7,QXB9,QXC4 QXC6,QXC9,QXE4,QXE6,QXE7,QXE8,QXE9,QXEB,QXH9,QXQ4,QXQ7,QXS4 QXU,SCK4,SHQ4,SM32,SMC1,SMD3,SMEO,SMX2,SNC,STC4,SWA4,SXB,SXB7 SXB9,SXE4,SXE7,SXE8,SXE9,SXEB,SXQ4,SXU,VA2,VAA1,VAA8,VAC2,VAG2 VC2,VCN2,VD2,VDB2,VDE2,VE39,VEP7,VEP9,VK2,VKB2,VKE4,VKE9,VKX4 VKX9,VM2,VMA2,VME2,VMS2,VN17,VN27,VNG1,VNG2,VNS9,VPE4,VPE5 VPE7,VPE9,VPX4,VPX5,VPX7,VPX9,VS39,VS49,VSD,VSD4,VSD7,VSD9 VTH4,VWA2,VWC,VWC7,VWC9,VWE,VWT4,VX39,VX8,VXB,VXB7,VXB9,VXE2 VXE4,VXE6,VXE7,VXE8,VXE9,VXEB,VXG,VXG2,VXP7,VXQ4

Ref. No.	Part No.	Description	Reqd. QTY GX 390 U1	GX 390 R1	GX 390 U2	GX 390 R2	Serial No.	Parts catalogue code
(2)	87521-ZF6-W04	EMBLEM(HONDA GX390) ·····	1	-	-	-	1398207 --------	ED6,EDD2,EDS2,EDS6,EDT6,EN6,ENT2,HA2,HJA2,LX2,LXE2,LXE4,LXE8 LXQ4,LXU,PA2,PAE2,PXE8,PXU,QA2,QA26,QAA2,QAE2,QAE6,QAW,QC2 QDW9,QE,QK4,QKA4,QKB2,QMEO,QNB2,QND,QNE2,QNE6,QNE8,QNE9,QNK QNR2,QNR6,QSC2,QWA2,QWA4,QWC4,QWH2,QWT2,QXB,QXB7,QXB9,QXC4 QXC6,QXC9,QXE4,QXE6,QXE7,QXE8,QXE9,QXEB,QXH9,QXQ4,QXQ7,QXS4 QXU,SCK4,SHQ4,SM32,SMC1,SMD3,SMEO,SMX2,SNC,STC4,SWA4,SXB,SXB7 SXB9,SXE4,SXE7,SXE8,SXE9,SXEB,SXQ4,SXU,VA2,VAA1,VAA8,VAC2,VAG2 VC2,VCN2,VD2,VDB2,VDE2,VE39,VEP7,VEP9,VK2,VKB2,VKE4,VKE9,VKX4 VKX9,VM2,VMA2,VME2,VMS2,VN17,VN27,VNG1,VNG2,VNS9,VPE4,VPE5 VPE7,VPE9,VPX4,VPX5,VPX7,VPX9,VS39,VS49,VSD,VSD4,VSD7,VSD9 VTH4,VWA2,VWC,VWC7,VWC9,VWE,VWT4,VX39,VX8,VXB,VXB7,VXB9,VXE2 VXE4,VXE6,VXE7,VXE8,VXE9,VXEB,VXG,VXG2,VXP7,VXQ4
			-	1	-	-	-------- --------	ED6,EDD2,EDS2,EDS6,EDT6,EN6,ENT2,PXM8,QKB2,QNB2,QWA2,VAA1,VAA8 VAC2,VAG2,VC2,VCN2,VD2,VDB2,VDE2,VEP9,VK2,VKB2,VKE4,VKX4,VN17 VNG1,VNS9,VPE4,VPE5,VPE7,VPE9,VPX4,VPX5,VPX7,VPX9,VS39,VS49 VSD4,VTH4,VWC,VWC7,VWC9,VWE,VWT4,VXG
	87521-Z5T-000	·····	-	-	1	1	-------- --------	ED6,EDD2,EDS6,EDT6,EN6,ENT2,PXE8,PXM8,PXU,PXU4,QXE8,QXU,SM32 SM34,SMX2,SXE4
3	87532-ZH7-000	MARK, THROTTLE INDICATION ···	1	1	1	1	-------- --------	HA2,HJA2,LKE,LX2,LXE2,LXE4,LXE8,LXQ4,LXU,PA2,PAE2,PXE8,PXM8 PXU,PXU4,QA2,QA26,QAA2,QAE2,QAE6,QAW,QC2,QDW9,QE,QHB4,QK4,QKA4 QKB2,QMEO,QNB2,QND,QNE2,QNE6,QNE8,QNE9,QNK,QNR2,QNR6,QSC2,QTR2 QWA2,QWH2,QWT2,QXB,QXB7,QXB9,QXC4,QXC6,QXC9,QXE4,QXE6,QXE7 QXE8,QXE9,QXEB,QXH9,QXQ4,QXQ7,QXU,SCK4,SHQ4,SM32,SM34,SMC1 SMD3,SMEO,SME6,SMX2,SMX4,SNC,STC4,SXB,SXB7,SXB9,SXE4,SXE7,SXE8 SXE9,SXEB,SXQ4,SXU,VA2,VDE2,VM2,VMA2,VME2,VN17,VN27,VNG1,VNG2 VNS9,VWC,VWE,VXB,VXB7,VXB9,VXE2,VXE4,VXE6,VXE7,VXE9,VXEB,VXQ4
			1	-	-	-	1451030 --------	QWA4,QWC4
4	87534-ZE1-841	LABEL, AIR CLEANER CAUTION ··	1	-	-	-	-------- --------	QC2,QDW9,QSC2,QWH2,QWT2,QXC6,QXC9
			1	-	-	-	1451030 --------	QWA4,QWC4
5	87535-ZE1-841	MARK, AIR CLEANER SALES POINT	1	-	-	-	-------- --------	QC2,QDW9,QSC2,QWA4,QWC4,QWH2,QWT2,QXC4,QXC6,QXC9,QXS4,SNC
6	87565-ZE2-A01	MARK, FUEL INDICATION (PICTOGRAPH)	1	-	-	-	-------- --------	STC4
	87565-ZE2-810	MARK, FUEL INDICATION(ENGLISH)	1	-	-	-	-------- --------	VM2,VME2
7	87594-ZB4-A00	MARK, OIL CAUTION ·····	1	1	-	1	-------- --------	ED6,EDD2,EDS2,EDS6,EDT6,EN6,ENT2,VC2,VC2N,VXG
8	87528-ZH7-000	MARK, CHOKE(GRAY) ·····	1	1	-	-	-------- --------	PXM8,PXU4,QE,QHB4,QKB2,QNB2,QNE2,QWA2,QXB9,QXE9,QXH9,SM34,SMX4 SXB9,SXE9,VAC2,VAG2,VCN2,VD2,VDB2,VDE2,VK2,VKB2,VN17,VNG1,VNS9 VSD9,VWC7,VWC9,VWT4,VXB9,VXE9
			1	-	-	-	1451030 --------	QWA4,QWC4
	87528-Z5T-000	MARK, CHOKE ·····	-	-	1	1	-------- --------	PXE8,PXM8,PXU,PXU4,QXE8,QXU,SM32,SM34,SMX2,SXE4
9	87516-ZH7-810	MARK, OPERATOR CAUTION (PICTOGRAPH)(MADE IN JAPAN)	(1)	(1)	-	-	-------- 1626671	EDS2,EDS6,EDT6,EN6,ENT2,PXM8,QKB2,QNB2,QTR2,QWA2,VAA1,VAA8 VAC2,VAG2,VC2,VC2N,VCN2,VD2,VDB2,VDE2,VE39,VEP9,VK2,VKB2,VKE4 VKE9,VKX4,VKX9,VMS2,VN17,VN27,VNG1,VNG2,VNS9,VPE4,VPE5,VPE7 VPE9,VPX4,VPX5,VPX7,VPX9,VS39,VS49,VSD4,VTH4,VWA2,VWC,VWC7 VWC9,VWE,VWT4,VX39,VXG,VXG2
	87516-ZH7-000	MARK, OPERATOR CAUTION (ENGLISH)(MADE IN JAPAN)	1	1	-	-	-------- 1626671	EDS2,EDS6,EDT6,EN6,ENT2,PXM8,QNB2,VAA1,VAA8,VAC2,VAG2,VC2,VC2N VCN2,VDB2,VDE2,VK2,VKE4,VKX4,VN17,VN27,VNG1,VNS9,VPE4,VPE7 VPX4,VPX7,VS39,VS49,VSD4,VTH4,VWT4,VXG
			1	-	-	-	-------- --------	QTR2,VE39,VKE9,VKX9,VNG2,VWA2,VX39,VXG2
	87516-ZH7-010	·····	1	-	-	-	1626672 --------	EDS2,EDS6,EDT6,EN6,ENT2,QNB2,VAA1,VAA8,VAC2,VAG2,VC2,VC2N,VCN2 VDB2,VDE2,VK2,VKE4,VKX4,VN17,VN27,VNG1,VNS9,VPE7,VPX4,VPX7 VS39,VS49,VSD4,VTH4,VWT4,VXG
	87519-ZH7-000	MARK, OPERATOR CAUTION (PICTOGRAPH)	1	-	-	-	1626672 --------	VPE4

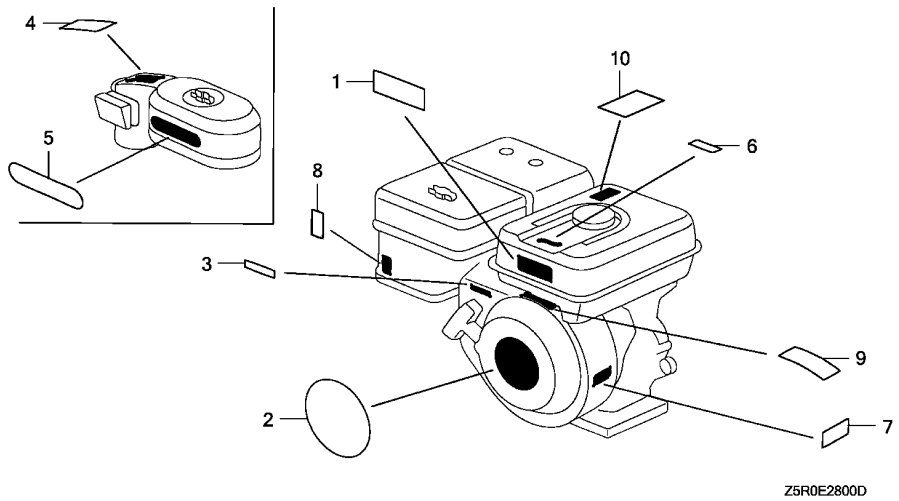

Ref. No.	Part No.	Description	Reqd. QTY GX 390 U1	GX 390 R1	GX 390 U2	GX 390 R2	Serial No.		Parts catalogue code
(9)	87516-ZH7-010	MARK, OPERATOR CAUTION (ENGLISH)(MADE IN JAPAN)	-	1	-	-	1626672	--------	EDS2,EDS6,EDT6,EN6,ENT2,PXM8,QNB2,VAA1,VAA8,VAC2,VAG2,VC2,VCN2 VDB2,VDE2,VK2,VKE4,VNG1,VS49,VSD4,VTH4,VWT4,VXG
	87519-ZH7-000	MARK, OPERATOR CAUTION (PICTOGRAPH)	-	1	-	-	1626672	--------	VKX4,VN17,VNS9,VPE4,VPE7,VPX4,VPX7,VS39
	87516-ZH7-010	MARK, OPERATOR CAUTION (ENGLISH)(MADE IN JAPAN)	-	-	-	1	--------	--------	ED6,EDD2,EDS6,EDT6,EN6,ENT2,PXM8
10	87539-ZOJ-000	MARK, EX. CAUTION(ENGLISH) ··	1	-	-	-	1626672	--------	HA2,HJA2,LKE,LX2,LXE2,LXE4,LXQ4,PA2,PAE2,PXE8,PXU,QA2,QAE2 QAE6,QAW,QC2,QDW9,QE,QHB4,QKA4,QMEO,QNB2,QND,QNE2,QNE6,QNE8 QNK,QNR2,QNR6,QSC2,QWA4,QWC4,QWH2,QWT2,QXB7,QXB9,QXC4,QXC6 QXC9,QXE4,QXE6,QXE7,QXE8,QXE9,QXH9,QXQ4,QXQ7,QXU,SCK4,SHQ4 SM32,SMC1,SMD3,SMEO,SME6,SMX2,SNC,STC4,SXB,SXB7,SXB9,SXE4,SXU VA2,VAC2,VAG2,VCN2,VDB2,VDE2,VK2,VM2,VN17,VN27,VNG1,VNS9,VSD VSD7,VSD9,VXB,VXB7,VXB9,VXE2,VXE4,VXE6,VXE7,VXE9,VXQ4
			-	1	-	-	1626672	--------	PXM8,QNB2,VCN2,VNG1
			-	-	1	-	--------	--------	PXE8,PXU,QXE8,QXU,SM32,SMX2,SXE4

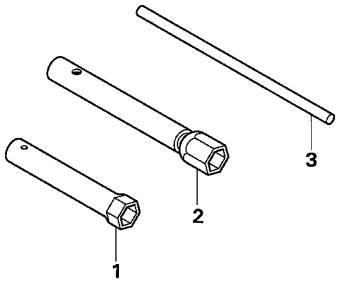

Z5R0−E2900

Ref. No.	L.O.N.	(Relative ref. Number) Description	F.R.T.

Ref. No.	Part No.	Description	Reqd. QTY GX 390 U1	GX 390 R1	GX 390 U2	GX 390 R2	Serial No.		Parts catalogue code
1	89216-ZB4-000	WRENCH, PLUG ·····	1	1	-	-	--------	--------	VC2,VC2N,VXG
2	89218-ZE1-000	WRENCH COMP., SPARK PLUG ····	1	1	1	-	--------	--------	HA2,PA2,PAE2,QA2,QA26,QAA2,QAE2,QAE6,QAW,QKB2,QNB2,QNE2,QNE6 QNK,QTR2,QWA2,SM32,SM34,SMC1,SMD3,SMX2,SMX4,SNC,STC4,VA2,VD2 VKE4,VKE9,VKX4,VKX9,VM2,VMA2,VN17,VNG1
			(1)	-	-	-	--------	--------	HJA2,QE,QHB4,QND,QNE8,QNE9,QNR2,QNR6,VN27,VNG2
3	89219-805-000	HANDLE, BOX WRENCH ·····	1	-	1	-	--------	--------	SM32,SM34

OTHER PARTS(COMBINATION SWITCH)

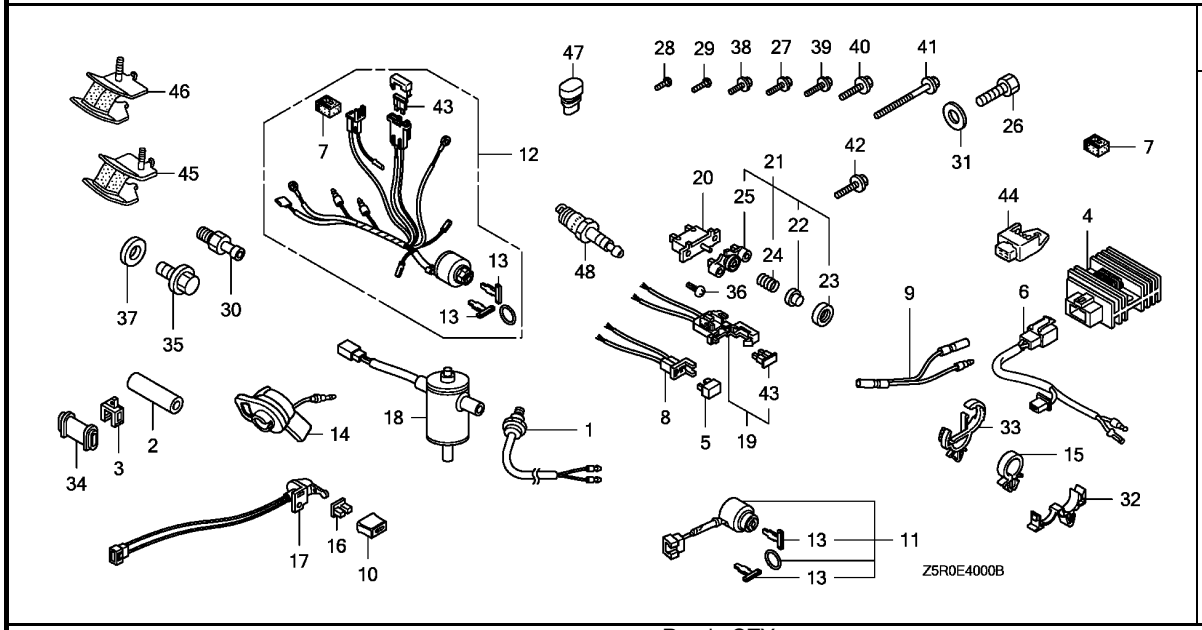

Ref. No.	L.O.N.	(Relative ref. Number) Description	F.R.T.

Ref. No.	Part No.	Description	Reqd. QTY GX 390 U1	GX 390 R1	GX 390 U2	GX 390 R2	Serial No.		Parts catalogue code
1	16500-ZE2-702	SWITCH, THERMO ·····	1	-	-	-	--------	--------	VKE9
			1	-	-	-	--------	1473703	VKE4
	16500-ZE2-703	·····	1	-	-	-	1473704	--------	VKE4
			-	1	-	-	--------	--------	VKE4
2	18301-ZE2-V60	COLLAR, 10X16X53 ·····	1	1	-	1	--------	--------	ED6,EDD2
3	30561-ZB4-000	CLIP, WIRE ·····	1	1	-	1	--------	--------	ED6,EDD2,EDS2,EDS6,EDT6
4	31600-ZE2-861	RECTIFIER ASSY., REGULATOR (10A)	1	-	-	-	--------	--------	HJA2,QWC4
			-	-	1	-	--------	--------	SM32,SM34
5	31700-124-008	RECTIFIER ASSY., SILICON (SHINDENGEN)	1	1	-	1	--------	--------	EDD2,EDS2,EDS6,ENT2,QC2,QKB2,VE39,VKE4,VKE9,VPE4,VPE5,VPE7 VPE9,VS49,VSD4,VWE
6	32110-ZE2-860	HARNESS ASSY., SUB WIRE ·····	1	-	-	-	--------	--------	HJA2,QWC4
			-	-	1	-	--------	--------	SM32,SM34
7	32127-738-700	SUSPENSION, COUPLER ·····	1	1	-	-	--------	--------	VKX4,VKX9,VPE4,VPE5,VPE7,VPE9,VS49,VSD4,VTH4
			2	-	-	-	--------	--------	VE39,VKE4,VKE9
			-	2	-	-	--------	--------	VKE4
8	32130-ZE1-000	COUPLER COMP. ·····	1	1	-	1	--------	--------	EDD2,EDS2,EDS6,ENT2
9	32197-ZH8-003	SUB HARNESS ·····	1	1	-	-	--------	--------	QNK,VXG
10	32343-892-003	KNOB, COCK LEVER ·····	1	1	-	1	--------	--------	EDT6
11	35100-ZB4-013	SWITCH ASSY., COMBINATION ···	1	-	-	-	--------	1414775	EDD2,EDS2,EDS6,ENT2
	35100-ZB4-023	·····	1	-	-	-	1414776	--------	EDD2,EDS2,EDS6,ENT2
			-	1	-	1	--------	--------	EDD2,EDS2,EDS6,ENT2
12	35100-ZE2-023	SWITCH ASSY., COMBINATION ···	1	-	-	-	--------	--------	VE39
	35100-ZE2-842	SWITCH ASSY., COMBINATION (3A-CHARGE)	1	-	-	-	--------	--------	VKE9,VKX9
	35100-ZE2-023	SWITCH ASSY., COMBINATION ···	1	-	-	-	--------	1416882	VS49,VSD4,VTH4

OTHER PARTS(COMBINATION SWITCH)

Ref. No.	Part No.	Description	Reqd. QTY GX 390 U1	GX 390 R1	GX 390 U2	GX 390 R2	Serial No.		Parts catalogue code
12)	35100-ZE2-842	SWITCH ASSY., COMBINATION (3A-CHARGE)	1	-	-	-	--------	1419413	VKE4,VKX4
	35100-ZE2-033	SWITCH ASSY., COMBINATION ···	1	-	-	-	1416883	--------	VS49,VSD4,VTH4
	35100-ZE2-843	SWITCH ASSY., COMBINATION (3A-CHARGE)	1	-	-	-	1419414	--------	VKE4,VKX4
			-	1	-	-	--------	--------	VKE4,VKX4
	35100-ZE2-033	SWITCH ASSY., COMBINATION ···	-	1	-	-	--------	--------	VS49,VSD4,VTH4
13	35111-880-013	KEY COMP. ·····	2	2	-	2	--------	--------	EDD2,EDS2,EDS6,ENT2,VE39,VKE4,VKE9,VKX4,VKX9,VS49,VSD4,VTH4
14	35120-Z0D-V81	SWITCH ASSY., ENGINE STOP ···	1	1	-	-	--------	--------	VAA1
15	36103-ZE1-000	HOLDER, STOP SWITCH CORD ····	1	-	-	-	--------	--------	QNK
16	36106-892-003	BUSH, CONTROL KNOB ·····	1	1	-	1	--------	--------	EDT6
17	36110-ZB4-701	SWITCH ASSY., ENGINE KILL ···	1	-	-	-	--------	1449524	EDT6
	36110-ZB4-702	·····	1	-	-	-	1449525	--------	EDT6
			-	1	-	1	--------	--------	EDT6
18	36170-ZB4-003	VALVE ASSY., SOLENOID ·····	1	-	-	-	--------	--------	VKE9,VKX9
			1	-	-	-	--------	1473703	VKE4,VKX4
	36170-ZB4-013	·····	1	-	-	-	1473704	--------	VKE4,VKX4
			-	1	-	-	--------	--------	VKE4,VKX4
19	38220-ZE2-R70	CASE COMP., FUSE ·····	1	1	-	1	--------	--------	EDD2,ENT2
	38220-ZE1-000	·····	1	1	-	1	--------	--------	EDS2,EDS6
20	38240-ZE2-840	PROTECTOR, CIRCUIT(3.5A) ····	1	1	-	1	--------	--------	EDD2
	38240-VA3-900	PROTECTOR, CIRCUIT(1.0A) ····	1	1	-	1	--------	--------	EDS2,EDS6
21	38250-898-000	LENS ASSY., PROTECTOR ·····	1	1	-	1	--------	--------	EDD2,EDS2,EDS6
22	38251-898-000	LENS ·····	1	1	-	1	--------	--------	EDD2,EDS2,EDS6
23	38252-898-000	CAP, LENS ·····	1	1	-	1	--------	--------	EDD2,EDS2,EDS6
24	38253-898-000	SPRING, COIL ·····	1	1	-	1	--------	--------	EDD2,EDS2,EDS6
25	38254-898-000	HOLDER, LENS ·····	1	1	-	1	--------	--------	EDD2,EDS2,EDS6
26	90003-ZE3-600	BOLT, HEX., 3/8-24UNF(25MM) ·	1	-	-	-	--------	--------	HJA2
27	90013-883-000	BOLT, FLANGE, 6X12(CT200) ···	1	1	-	1	--------	--------	ED6,EDD2,EN6,ENT2
28	90050-ZE1-000	SCREW, TAPPING, 5X8 ·····	1	-	-	-	--------	--------	VE39,VKE9,VKX9,VX39
29	90101-692-000	SCREW, GLOVE BOX ·····	1	1	-	1	--------	--------	EDS2,EDS6,EDT6
30	90131-ZE3-790	PLUG, OIL DRAIN ·····	2	-	2	-	--------	--------	SM32,SM34
			1	-	-	-	--------	--------	SMX4
			1	-	-	-	1626574	--------	SMX2
31	90471-ZE3-000	WASHER, 10.5X40X4 ·····	1	-	-	-	--------	--------	HJA2
32	90650-SD9-003	CLIP, WIRE HARNESS ·····	1	1	-	-	--------	--------	VC2,VC2N,VXG
33	90684-ZA0-601	CLIP, HARNESS ·····	1	-	-	-	--------	--------	QNK
34	91406-ZB4-000	TUBE, CORD ·····	1	1	-	1	--------	--------	ED6,EDD2
35	92800-12000	BOLT, DRAIN PLUG, 12MM ·····	2	-	2	-	--------	--------	SM32,SM34
			1	-	-	-	--------	--------	SMX4
			1	-	-	-	1626574	--------	SMX2
36	93500-03012-0H	SCREW, PAN, 3X12 ·····	2	2	-	2	--------	--------	EDD2
37	94109-12000	WASHER, DRAIN PLUG, 12MM ····	2	-	-	-	--------	--------	SM34
			1	-	-	-	--------	--------	SMX4
			1	-	-	-	1626574	--------	SMX2
			-	-	2	-	--------	--------	SM32,SM34
38	95701-06010-00	BOLT, FLANGE, 6X10 ·····	8	8	-	-	--------	--------	EN6,ENT2
39	95701-06020-00	BOLT, FLANGE, 6X20 ·····	3	3	-	3	--------	--------	ED6,EDD2,EN6
40	95701-08020-00	BOLT, FLANGE, 8X20 ·····	2	2	-	-	--------	--------	ED6,EDD2,EDS2,EDS6,EDT6,EN6,ENT2
41	95701-08070-00	BOLT, FLANGE, 8X70 ·····	1	1	-	1	--------	--------	ED6,EDD2
42	95801-08020-18	BOLT, FLANGE, 8X20 ·····	1	1	-	1	--------	--------	ED6,EDD2
43	98200-31000	FUSE, BLADE(10A) ·····	1	1	-	1	--------	--------	EDD2,ENT2

OTHER PARTS(COMBINATION SWITCH)

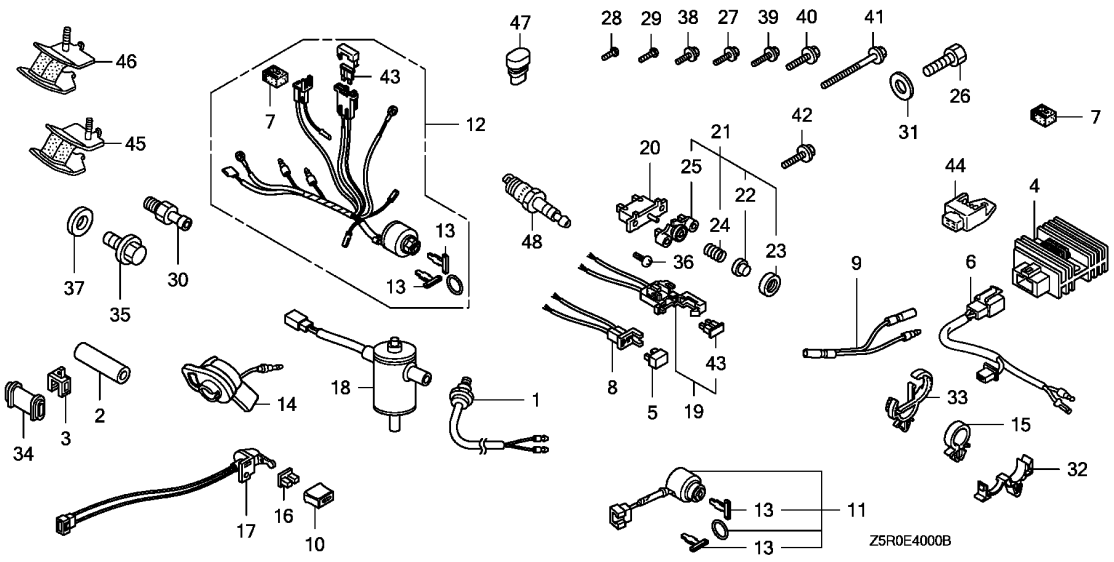

Ref. No.	Part No.	Description	Reqd. QTY GX 390 U1	GX 390 R1	GX 390 U2	GX 390 R2	Serial No.		Parts catalogue code
43)	98200-30500	FUSE, BLADE(5A)	1	1	-	1	--------	--------	EDS2,EDS6,VE39,VS49,VSD4,VTH4
	98200-31500	FUSE, BLADE(15A)	1	1	-	-	--------	--------	VKE4,VKE9,VKX4,VKX9
44	31710-ZS9-A01	RECTIFIER ASSY.	1	-	-	-	--------	1384934	VEP9
	31710-ZS9-A02	.....	1	-	-	-	1384935	--------	VEP9
			-	1	-	-	--------	--------	VEP9
45	68325-ZC2-000	RUBBER, BOTTOM	2	2	-	2	--------	--------	VWS
46	68325-899-000	RUBBER, BOTTOM	2	2	-	2	--------	--------	VWS
47	76122-952-000	STOPPER, DISCHARGE GUARD	4	4	-	4	--------	--------	VWS
48	98079-55846	PLUG, SPARK(BPR5ES)(NGK)	1	1	-	1	--------	--------	VWS

E-40-1 OTHER PARTS(MANUAL CHOKE)

L 2

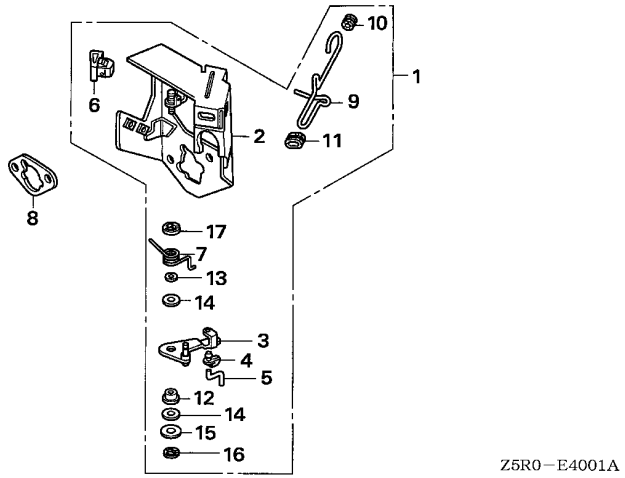

Ref. No.	L.O.N.	(Relative ref. Number) Description	F.R.T.

Ref. No.	Part No.	Description	Reqd. QTY GX 390 U1	GX 390 R1	GX 390 U2	GX 390 R2	Serial No.		Parts catalogue code
1	16260-ZF6-U70	STAY ASSY., MANUAL CHOKE	1	1	-	-	--------	--------	VAA1,VAA8
2	16261-ZE2-702	STAY COMP., SOLENOID	1	1	-	-	--------	--------	VAA1,VAA8
3	16262-ZE2-711	LEVER, CHOKE	1	1	-	-	--------	--------	VAA1,VAA8
4	16263-ZA0-000	JOINT, ROD	1	1	-	-	--------	--------	VAA1,VAA8
5	16264-ZE2-701	ROD, CHOKE	1	1	-	-	--------	--------	VAA1,VAA8
6	16265-ZE2-721	STOPPER, CHOKE ROD	1	1	-	-	--------	--------	VAA1,VAA8
7	16268-ZE2-721	SPRING, MANUAL CHOKE	1	1	-	-	--------	--------	VAA1,VAA8
8	16269-ZA0-800	PACKING, AIR CLEANER	1	1	-	-	--------	--------	VAA1,VAA8
9	16611-ZE2-711	ROD, CHOKE CONTROL	1	1	-	-	--------	--------	VAA1,VAA8
10	16613-893-000	GROMMET, CHOKE ROD	1	1	-	-	--------	--------	VAA1,VAA8
11	16615-893-000	GUIDE, CHOKE ROD	1	1	-	-	--------	--------	VAA1,VAA8
12	53149-964-003	BUSH, ARM PIVOT	1	1	-	-	--------	--------	VAA1,VAA8
13	90431-ZE2-700	WASHER, CHOKE LEVER	1	1	-	-	--------	--------	VAA1,VAA8
14	90432-ZE2-700	SEAL, CHOKE LEVER	2	2	-	-	--------	--------	VAA1,VAA8
15	94103-05000	WASHER, PLAIN, 5MM	1	1	-	-	--------	--------	VAA1,VAA8
16	94540-04010	E-RING, 4MM	1	1	-	-	--------	--------	VAA1,VAA8
17	94540-07010	E-RING, 7MM	1	1	-	-	--------	--------	VAA1,VAA8

OTHER PARTS(AIR CLEANER)(1)

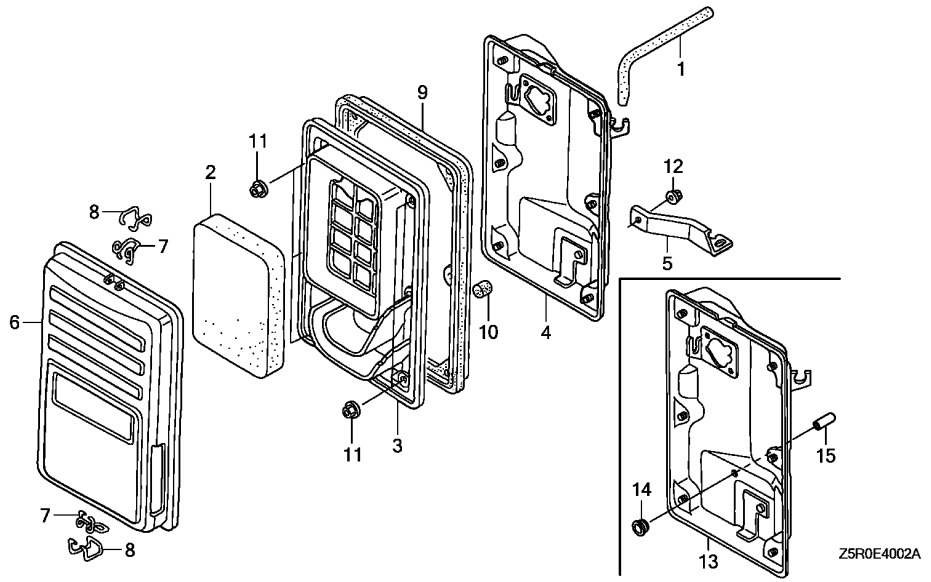

Ref. No.	L.O.N.	(Relative ref. Number) Description	F.R.T.

Ref. No.	Part No.	Description	Reqd. QTY GX 390 U1	GX 390 R1	GX 390 U2	GX 390 R2	Serial No.		Parts catalogue code
1	15721-ZB4-000	TUBE, BREATHER	1	1	-	-	--------	--------	ED6,EDD2,EDS2,EDS6,EDT6,EN6,ENT2,VAA1,VAA8,VWS
			-	-	-	1	--------	--------	ED6,EDD2,EN6,ENT2,VWS
2	17211-899-000	ELEMENT, AIR CLEANER	1	1	-	-	--------	--------	ED6,EDD2,EDS2,EDS6,EDT6,EN6,ENT2,VAA1,VAA8,VWS
			-	-	-	1	--------	--------	ED6,EDD2,EN6,ENT2,VWS
3	17212-ZB4-003	SEPARATOR, AIR CLEANER	1	-	-	-	--------	1522959	ED6,EDD2,EDS2,EDS6,EDT6,EN6,ENT2,VAA1,VAA8,VWS
	17212-Z5R-000		1	-	-	-	1522960	--------	ED6,EDD2,EDS2,EDS6,EDT6,EN6,ENT2,VAA1,VAA8,VWS
			-	1	-	-	--------	--------	ED6,EDD2,EDS2,EDS6,EDT6,EN6,ENT2,VAA1,VAA8,VWS
			-	-	-	1	--------	--------	ED6,EDD2,EN6,ENT2,VWS
4	17220-ZB4-003	CASE COMP., AIR CLEANER	1	-	-	-	--------	1522959	ED6,EDD2,EDS2,EDS6,EDT6,EN6,ENT2,VAA1,VAA8,VWS
5	17222-ZC2-000	STAY, AIR CLEANER	1	1	-	-	--------	--------	ED6,EDD2,EDS2,EDS6,EDT6,EN6,ENT2,VAA1,VAA8,VWS
			-	-	-	1	--------	--------	ED6,EDD2,EN6,ENT2,VWS
6	17231-899-000	COVER COMP., AIR CLEANER	1	1	-	-	--------	--------	ED6,EDD2,EDS2,EDS6,EDT6,EN6,ENT2,VAA1,VAA8,VWS
			-	-	-	1	--------	--------	ED6,EDD2,EN6,ENT2,VWS
7	17235-899-000	CLIP A, AIR CLEANER WIRE	2	2	-	-	--------	--------	ED6,EDD2,EDS2,EDS6,EDT6,EN6,ENT2,VAA1,VAA8,VWS
			-	-	-	2	--------	--------	ED6,EDD2,EN6,ENT2,VWS
8	17236-899-000	CLIP B, AIR CLEANER WIRE	2	2	-	-	--------	--------	ED6,EDD2,EDS2,EDS6,EDT6,EN6,ENT2,VAA1,VAA8,VWS
			-	-	-	2	--------	--------	ED6,EDD2,EN6,ENT2,VWS
9	17252-899-000	SEAL, AIR CLEANER	1	1	-	-	--------	--------	ED6,EDD2,EDS2,EDS6,EDT6,EN6,ENT2,VAA1,VAA8,VWS
			-	-	-	1	--------	--------	ED6,EDD2,EN6,ENT2,VWS
10	17367-413-690	FILTER, DRAIN TUBE	1	1	-	-	--------	--------	ED6,EDD2,EDS2,EDS6,EDT6,EN6,ENT2,VAA1,VAA8,VWS
			-	-	-	1	--------	--------	ED6,EDD2,EN6,ENT2,VWS
11	94050-05000	NUT, FLANGE, 5MM	6	6	-	-	--------	--------	ED6,EDD2,EDS2,EDS6,EDT6,EN6,ENT2,VAA1,VAA8,VWS
			-	-	-	6	--------	--------	ED6,EDD2,EN6,ENT2,VWS
12	94050-06000	NUT, FLANGE, 6MM	1	1	-	-	--------	--------	ED6,EDD2,EDS2,EDS6,EDT6,EN6,ENT2,VAA1,VAA8,VWS
			-	-	-	1	--------	--------	ED6,EDD2,EN6,ENT2

OTHER PARTS(AIR CLEANER)(1)

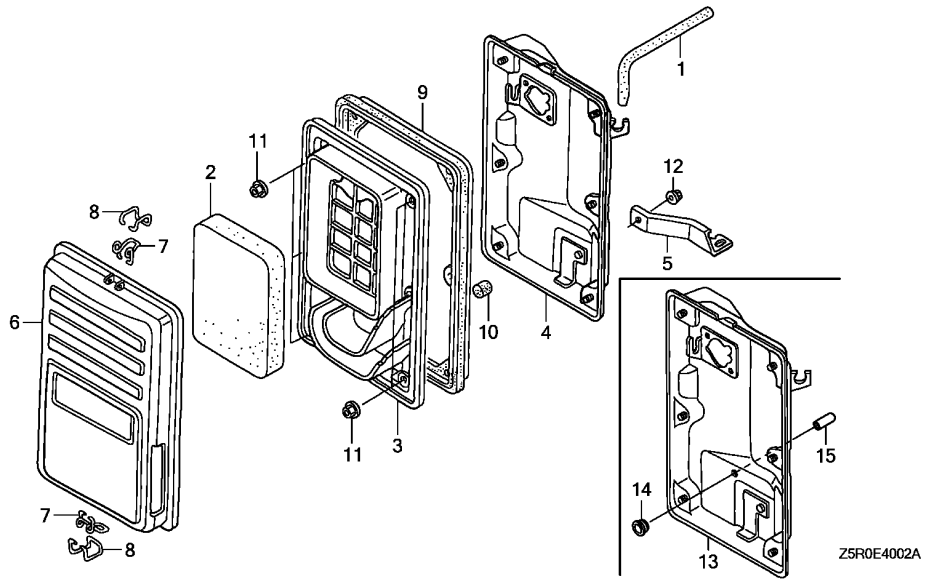

Ref. No.	Part No.	Description	Reqd. QTY GX 390 U1	GX 390 R1	GX 390 U2	GX 390 R2	Serial No.		Parts catalogue code
13	17220-Z5R-000	CASE COMP., AIR CLEANER ·····	1	-	-	-	1522960	--------	ED6,EDD2,EDS2,EDS6,EDT6,EN6,ENT2,VAA1,VAA8,VWS
			-	1	-	-	--------	--------	ED6,EDD2,EDS2,EDS6,EDT6,EN6,ENT2,VAA1,VAA8,VWS
			-	-	-	1	--------	--------	ED6,EDD2,EN6,ENT2,VWS
14	17232-898-000	GROMMET, AIR CLEANER ·····	1	-	-	-	1522960	--------	ED6,EDD2,EDS2,EDS6,EDT6,EN6,ENT2,VAA1,VAA8,VWS
			-	1	-	-	--------	--------	ED6,EDD2,EDS2,EDS6,EDT6,EN6,ENT2,VAA1,VAA8,VWS
			-	-	-	1	--------	--------	ED6,EDD2,EN6,ENT2,VWS
15	90634-ZL8-H00	CAP, SEALING ·····	1	-	-	-	1522960	--------	ED6,EDD2,EDS2,EDS6,EDT6,EN6,ENT2,VAA1,VAA8,VWS
			-	1	-	-	--------	--------	ED6,EDD2,EDS2,EDS6,EDT6,EN6,ENT2,VAA1,VAA8,VWS
			-	-	-	1	--------	--------	ED6,EDD2,EN6,ENT2,VWS

OTHER PARTS(MUFFLER)(1)

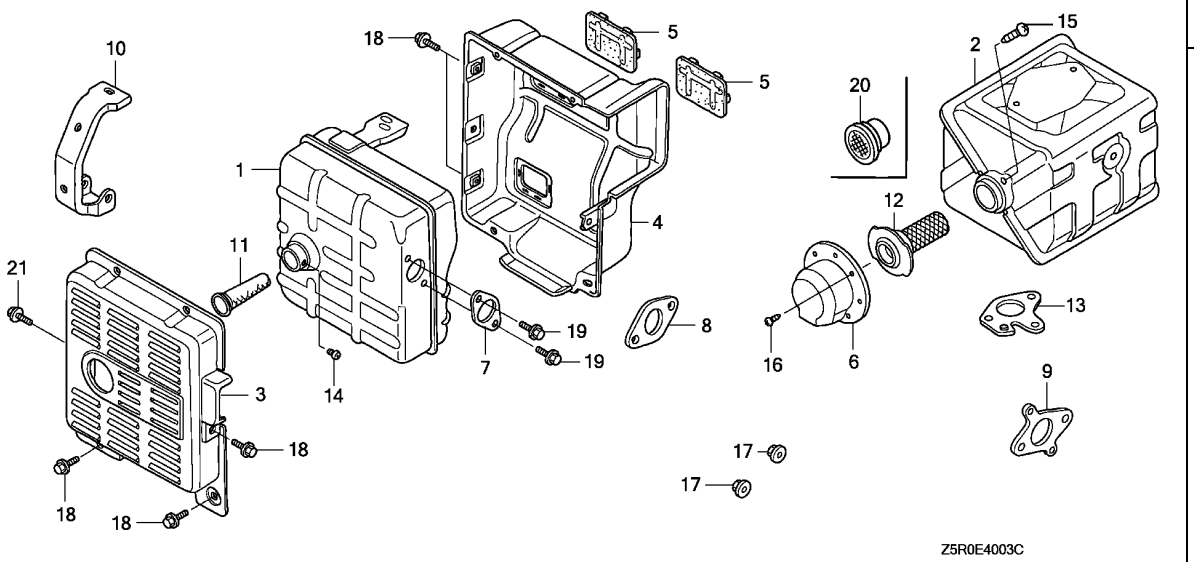

Ref. No.	L.O.N.	(Relative ref. Number) Description	F.R.T.

Ref. No.	Part No.	Description	Reqd. QTY GX 390 U1	GX 390 R1	GX 390 U2	GX 390 R2	Serial No.		Parts catalogue code
1	18310-ZE2-V60	MUFFLER COMP.(TSURUMI) ·····	1	1	-	-	--------	--------	ED6,EDD2,EN6,ENT2,VE39,VKE4,VKE9,VKX4,VKX9,VX39
	18310-ZD1-E31	MUFFLER COMP.(SANKEI) ·····	1	1	-	-	--------	--------	EDS2,EDS6,EDT6,VAA1,VAA8
	18310-ZE2-V61	MUFFLER COMP.(TSURUMI) ·····	-	-	-	1	--------	--------	ED6,EDD2,EN6,ENT2
	18310-ZD1-E32	MUFFLER COMP.(SANKEI) ·····	-	-	-	1	--------	--------	EDS6,EDT6
2	18310-ZE2-W61	MUFFLER COMP.(100DB) ·····	1	1	-	-	--------	--------	VPE4,VPE7,VPX4,VPX7,VS39
3	18320-ZC2-000	PROTECTOR, MUFFLER OUTER ····	1	1	-	1	--------	--------	ED6,EDD2,EDS2,EDS6,EDT6,VE39,VKE4,VKE9,VKX4,VKX9,VX39
4	18325-ZB4-000	PROTECTOR, MUFFLER INNER ····	1	1	-	1	--------	--------	ED6,EDD2,EDS2,EDS6,EDT6,EN6,ENT2,VE39,VKE4,VKE9,VKX4,VKX9,VX39
5	18329-ZB4-000	SEAL, MUFFLER PROTECTOR ·····	2	2	-	2	--------	--------	ED6,EDD2,EDS2,EDS6,EDT6,EN6,ENT2,VE39,VKE4,VKE9,VKX4,VKX9,VX39
6	18331-ZE3-811	CAP, MUFFLER ·····	1	-	-	-	--------	--------	SM34,SMX4
	18331-ZE3-810	·····	1	-	-	-	--------	1166160	QWA4,QWC4,SM32,VK2
	18331-ZE3-811	·····	1	-	-	-	1166161	--------	QWA4,QWC4,SM32,VK2
			-	-	1	-	--------	--------	SM32,SM34
7	18333-ZB4-800	GASKET, EX. PIPE ·····	1	1	-	-	--------	--------	ED6,EDD2,EDS2,EDS6,EDT6,EN6,ENT2,VE39,VKE4,VKE9,VKX4,VKX9,VS49 VSD4,VTH4,VWS,VX39
	18333-ZB4-801	·····	-	-	-	1	--------	--------	ED6,EDD2,EDS6,EDT6,EN6,ENT2,VWS
8	18333-ZE3-800	GASKET, EX. PIPE ·····	1	1	-	-	--------	--------	VPE4,VPE7,VPX4,VPX7,VS39,VWT4,VXG2
9	18333-ZF6-W01	GASKET, EX. PIPE ·····	1	1	-	1	--------	--------	VC2,VC2N,VEP7,VMS2,VPE5,VPE9,VPX5,VPX9,VWC,VWE,VWS,VXG,VXP7
10	18338-ZE2-V60	STAY A, MUFFLER(TSURUMI) ····	1	1	-	1	--------	--------	ED6,EDD2
11	18355-ZB4-630	ARRESTER, SPARK ·····	1	1	-	1	--------	--------	ED6,EDD2,EDS2,EDS6,EDT6,EN6,ENT2,VAA1,VAA8,VKE4,VKX4,VTH4
12	18355-ZE2-W00	ARRESTER, SPARK ·····	(1)	(1)	-	-	--------	--------	ED6,EDD2,EDS2,EDS6,EDT6,EN6,ENT2,VAA1,VAA8,VKE4,VKX4,VSD4,VTH4 VWT4,VXG
			1	1	-	-	--------	--------	VEP7,VPE4,VPE5,VPE7,VPE9,VPX4,VPX5,VPX7,VPX9,VS39,VXP7
13	18381-ZE2-W10	GASKET, MUFFLER(ARRESTER) (NIPPON LEAKLESS)	(1)	(1)	-	-	--------	--------	ED6,EDD2,EDS2,EDS6,EDT6,EN6,ENT2,VAA1,VAA8,VKE4,VKX4,VPE5,VPX5 VSD4,VTH4,VWT4,VXG
			1	1	-	-	--------	--------	VPE4,VPE7,VPX4,VPX7,VS39
14	90002-ZE2-U91	SCREW, TAPPING, 4X8 ·····	1	1	-	1	--------	--------	ED6,EDD2,EDS2,EDS6,EDT6,EN6,ENT2,VAA1,VAA8,VKE4,VKX4,VTH4

OTHER PARTS(MUFFLER)(1)

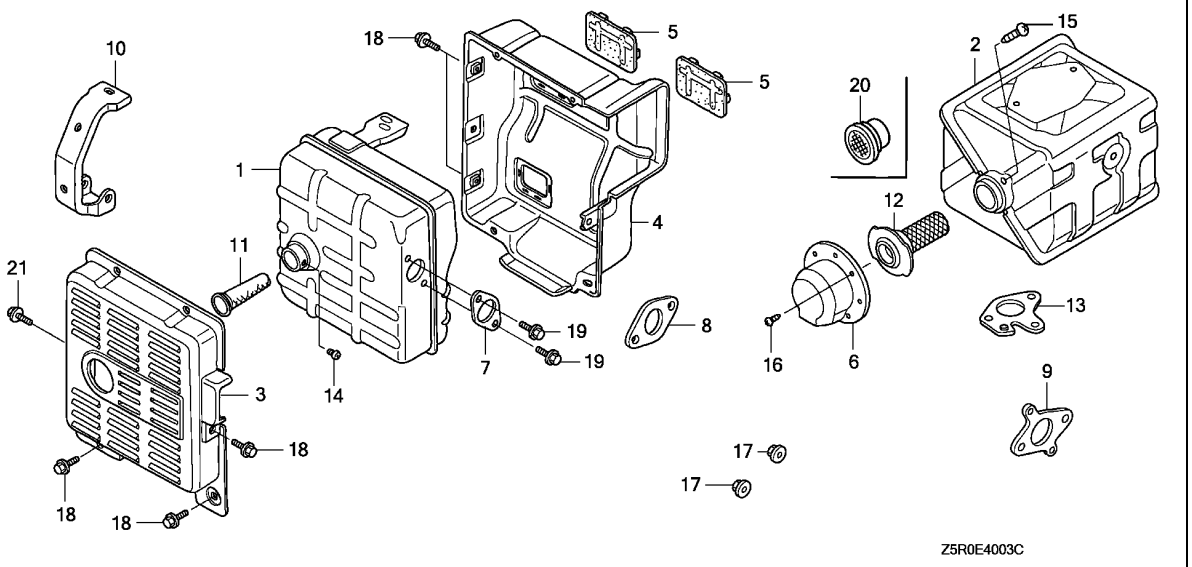

Ref. No.	Part No.	Description	Reqd. QTY GX 390 U1	GX 390 R1	GX 390 U2	GX 390 R2	Serial No.		Parts catalogue code
15	90050-ZE1-000	SCREW, TAPPING, 5X8	1	1	-	-	--------	--------	VEP7,VKE4,VKX4,VPE4,VPE5,VPE7,VPE9,VPX4,VPX5,VPX7,VPX9,VS39 VXP7
	90056-ZL0-000	SCREW, TAPPING, 4X6	1	-	-	-	--------	--------	VE39,VKE9,VKX9,VX39
16	90055-ZE1-000	SCREW, TAPPING, 4X6	3	-	3	-	--------	--------	QWA4,QWC4,SM32,SM34,SMX4,VK2
17	94050-08000	NUT, FLANGE, 8MM	2	2	-	-	--------	--------	ED6,EDD2,EN6,ENT2,VC2,VC2N,VEP7,VMS2,VPE5,VPE9,VPX5,VPX9,VWC VWE,VWS,VXG,VXG2,VXP7
			5	-	-	-	--------	--------	VE39,VKE4,VKE9,VKX4,VKX9,VPE4,VPE7,VPX4,VPX7,VS39,VX39
			-	5	-	-	--------	--------	VKE4,VKX4,VPE4,VPE7,VPX4,VPX7,VS39
			-	-	-	2	--------	--------	ED6,EDD2,EN6,ENT2,VWS
18	95701-06012-00	BOLT, FLANGE, 6X12	7	7	-	7	--------	--------	ED6,EDD2,EDS2,EDS6,EDT6,VE39,VKE4,VKE9,VKX4,VKX9,VX39
	95701-06010-00	BOLT, FLANGE, 6X10	7	7	-	7	--------	--------	EN6,ENT2
19	95701-08020-00	BOLT, FLANGE, 8X20	2	2	-	2	--------	--------	ED6,EDD2,EDS2,EDS6,EDT6,EN6,ENT2,VE39,VKE4,VKE9,VKX4,VKX9,VWS VX39
20	18361-ZL0-000	NETTING, WIRE FLANGE	1	-	-	-	--------	--------	VE39,VKE9,VKX9,VX39
21	95701-06012-00	BOLT, FLANGE, 6X12	1	1	-	1	--------	--------	ED6,EDD2,EDS2,VE39,VKE4,VKE9,VKX4,VKX9,VX39
	95701-06010-00	BOLT, FLANGE, 6X10	1	-	-	-	--------	--------	EN6,ENT2
	95701-06012-00	BOLT, FLANGE, 6X12	1	-	-	-	--------	1460808	EDS6,EDT6
	95701-06010-00	BOLT, FLANGE, 6X10	1	-	-	-	1460809	--------	EDS6,EDT6
			-	1	-	1	--------	--------	EDS6,EDT6,EN6,ENT2

OTHER PARTS(FUEL TANK)

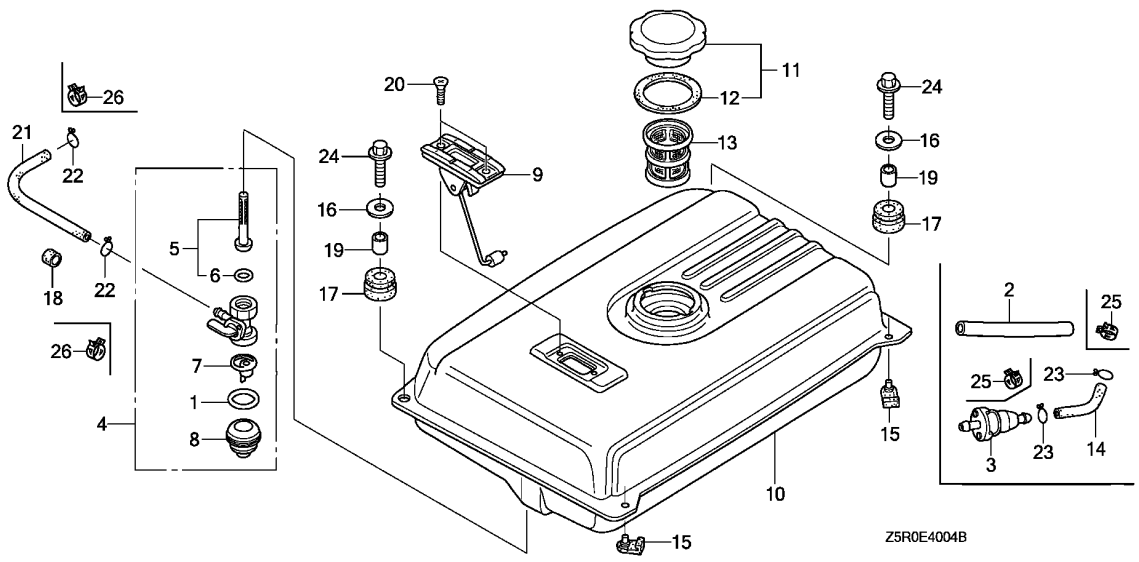

Ref. No.	L.O.N.	(Relative ref. Number) Description	F.R.T.

Ref. No.	Part No.	Description	Reqd. QTY GX 390 U1	GX 390 R1	GX 390 U2	GX 390 R2	Serial No.		Parts catalogue code
1	16173-001-004	PACKING, FUEL STRAINER CUP ··	1	1	-	1	--------	--------	ED6,EDD2,EDS2,EDS6,EDT6,PXM8,VWS
2	16854-ZH8-000	RUBBER, SUPPORTER(107MM) ····	1	1	-	-	--------	--------	VK2
3	16910-ZE8-015	STRAINER COMP., FUEL ·····	1	1	-	-	--------	--------	VTH4
4	16950-ZB4-015	COCK ASSY., FUEL ·····	1	1	-	1	--------	--------	ED6,EDD2,EDS2,EDS6,EDT6,PXM8,VWS
5	16952-ZB4-005	SCREEN SET, FUEL STRAINER ···	1	1	-	1	--------	--------	ED6,EDD2,EDS2,EDS6,EDT6,PXM8,VWS
6	16958-397-771	O-RING, 9.0X1.3 ·····	1	1	-	1	--------	--------	ED6,EDD2,EDS2,EDS6,EDT6,PXM8,VWS
7	16959-471-831	FILTER, CUP ·····	1	1	-	1	--------	--------	ED6,EDD2,EDS2,EDS6,EDT6,PXM8,VWS
8	16967-GA6-671	CUP, FUEL STRAINER ·····	1	1	-	1	--------	--------	ED6,EDD2,EDS2,EDS6,EDT6,PXM8,VWS
9	17505-ZB2-003	METER ASSY., FUEL ·····	1	1	-	1	--------	--------	ED6,EDD2,PXM8,VWS
10	17510-ZB4-000ZH	TANK COMP., FUEL							
		R280.....POWER RED	1	1	-	1	--------	--------	ED6,EDD2
	17510-ZB4-000ZA	*NH31*.....MCKINLEY WHITE	1	1	-	1	--------	--------	ED6,EDD2,PXM8
	17510-ZB4-000ZC	*NH1*.....BLACK	1	1	-	-	--------	--------	ED6,EDD2
	17510-ZB4-000ZE	*T68*.....TSURUMI BLUE	1	1	-	-	--------	--------	ED6,EDD2
	17510-ZB4-000ZF	*Y131*.....LIGHTNING YELLOW	1	1	-	-	--------	--------	ED6,EDD2
	17510-ZB4-000ZJ	*T80*.....BAKELITE ORANGE	1	1	-	-	--------	--------	ED6,EDD2
11	17620-899-013	CAP COMP., FUEL FILLER ·····	1	1	-	1	--------	--------	ED6,EDD2,PXM8,VWS
12	17631-899-000	PACKING, FUEL FILLER CAP ····	1	1	-	1	--------	--------	ED6,EDD2,PXM8,VWS
13	17670-899-000	FILTER COMP., FUEL ·····	1	1	-	1	--------	--------	ED6,EDD2,PXM8,VWS
14	17701-ZK6-U30	TUBE, FUEL, 6.5X50 ·····	1	-	-	-	--------	1111074	VTH4
	17701-Z5S-U31	TUBE, FUEL, 6.3X50(FKM) ·····	1	-	-	-	1111075	1585923	VTH4
	17701-Z5S-U32	·····	1	-	-	-	1585924	--------	VTH4
			-	1	-	-	--------	--------	VTH4
15	50319-ZB2-000	RUBBER, TANK MOUNTING ·····	2	2	-	2	--------	--------	ED6,EDD2,EDS2,EDS6,EDT6,PXM8
16	90503-898-000	WASHER, TANK CUSHION ·····	2	2	-	2	--------	--------	ED6,EDD2,PXM8
			4	4	-	4	--------	--------	VWS

OTHER PARTS(FUEL TANK)

Ref. No.	Part No.	Description	Reqd. QTY GX 390 U1	GX 390 R1	GX 390 U2	GX 390 R2	Serial No.		Parts catalogue code
17	90851-898-000	RUBBER, TANK CUSHION ·····	2	2	-	2	--------	--------	ED6,EDD2,PXM8
			4	4	-	4	--------	--------	VWS
18	90854-ZB2-000	RUBBER, FUEL(9X15X10) ·····	1	1	-	-	--------	--------	EDD2,VWS
19	91551-898-000	COLLAR, TANK CUSHION ·····	2	2	-	2	--------	--------	ED6,EDD2,PXM8
			4	4	-	4	--------	--------	VWS
20	93600-05010-0A	SCREW, FLAT, 5X10 ·····	2	2	-	2	--------	--------	ED6,EDD2
21	95001-45235-40	TUBE, FUEL, 4.5X235 (95001-45001-60M)	1	-	-	-	--------	1105013	VK2
	95001-45190-40	TUBE, FUEL, 4.5X190 ·····	1	-	-	-	--------	1114018	ED6
	95001-45260-40	TUBE, FUEL, 4.5X260 (95001-45001-60M)	1	-	-	-	--------	1114019	EDD2
	91424-Z5L-801	TUBE, FUEL, 4.5X235(FKM) ····	1	-	-	-	1105014	1588552	VK2
	91424-Z5F-811	TUBE, FUEL, 4.5X190(FKM) ····	1	-	-	-	1114019	1617121	ED6
	91424-Z5R-801	TUBE, FUEL, 4.5X260(FKM) ····	1	-	-	-	1114020	1590225	EDD2
	91424-Z5L-802	TUBE, FUEL, 4.5X235(FKM) ····	1	-	-	-	1588553	--------	VK2
	91424-Z5R-802	TUBE, FUEL, 4.5X260(FKM) ····	1	-	-	-	1590226	--------	EDD2
	91424-Z5F-812	TUBE, FUEL, 4.5X190(FKM) ····	1	-	-	-	1617122	--------	ED6
			-	1	-	1	--------	--------	ED6
	91424-Z5R-802	TUBE, FUEL, 4.5X260(FKM) ····	-	1	-	1	--------	--------	EDD2
	91424-ZBG-V41	TUBE, FUEL, 4.5X700(FKM) ····	-	1	-	1	--------	--------	PXM8
	91424-Z4J-802	TUBE, FUEL, 4.5X150(FKM) ····	-	-	-	1	--------	--------	EDS6,EDT6
	91424-Z5L-812	TUBE, FUEL, 4.5X165(FKM) ····	-	-	-	1	--------	--------	EN6,ENT2
22	95002-02080	CLIP, TUBE(B8) ·····	2	-	-	-	--------	1105013	VK2
			2	-	-	-	--------	1114018	ED6
			2	-	-	-	--------	1114019	EDD2
23	95002-70000	CLIP, TUBE(C11) ·····	2	-	-	-	--------	1111074	VTH4
24	95701-06022-00	BOLT, FLANGE, 6X22 ·····	2	2	-	2	--------	--------	ED6,EDD2,PXM8
25	95002-41050-08	CLAMP, TUBE(D10.5) ·····	2	-	-	-	1111075	--------	VTH4
			-	2	-	-	--------	--------	VTH4
26	95002-40800-08	CLAMP, TUBE(D8) ·····	2	-	-	1	--------	--------	VWS
			2	-	-	-	1105014	--------	VK2
			2	-	-	-	1114019	--------	ED6
			2	-	-	-	1114020	--------	EDD2
			-	2	-	-	--------	--------	ED6,EDD2,PXM8,VK2,VWS
			-	-	-	2	--------	--------	ED6,EDD2,EDS6,EDT6,EN6,ENT2,PXM8

OTHER PARTS(LABEL/TOOL)

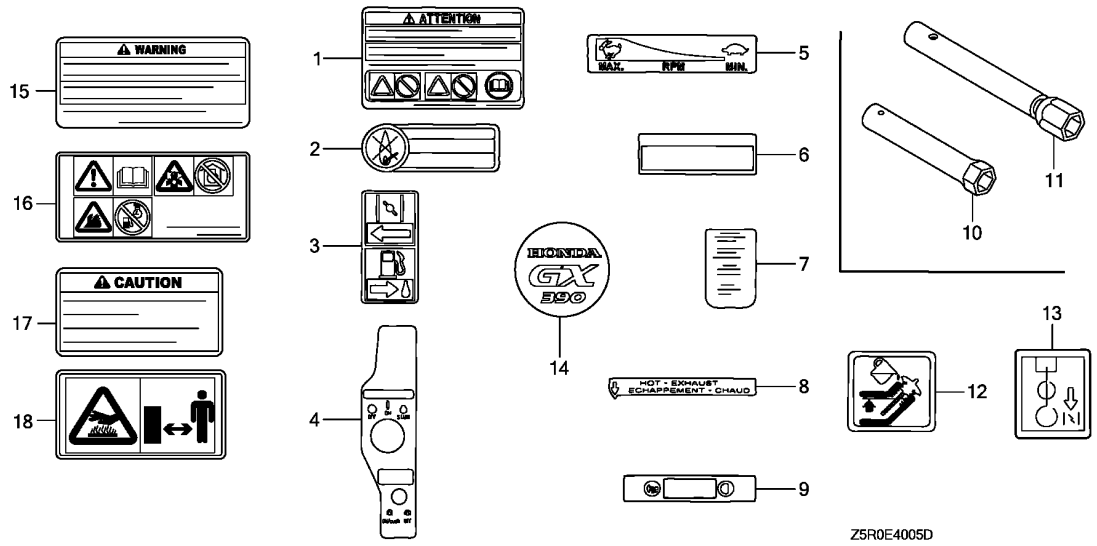

Ref. No.	L.O.N.	(Relative ref. Number) Description	F.R.T.

Ref. No.	Part No.	Description	Reqd. QTY GX 390 U1	GX 390 R1	GX 390 U2	GX 390 R2	Serial No.		Parts catalogue code
1	87516-ZH7-800	MARK, OPERATOR CAUTION(FRENCH) (MADE IN JAPAN)	1	1	-	-	--------	1626671	ED6,EDD2,EDS2,EDS6,EDT6,EN6,ENT2,HA2,HJA2,LKE,LX2,LXE2,LXE4 LXQ4,PA2,PAE2,PXE8,PXM8,PXU,QA2,QAE2,QAE6,QAW,QC2,QDW9,QE,QHB4 QK4,QKA4,QKB2,QMEO,QNB2,QND,QNE2,QNE6,QNE8,QNK,QNR2,QNR6,QSC2 QWA2,QWA4,QWC4,QWH2,QWT2,QXB7,QXB9,QXC4,QXC6,QXC9,QXE4,QXE6 QXE7,QXE8,QXE9,QXH9,QXQ4,QXQ7,QXS4,QXU,SCK4,SHQ4,SM32,SMC1 SMD3,SMEO,SME6,SMX2,SNC,STC4,SWA4,SXB,SXB7,SXB9,SXE4,SXU,VA2 VAA1,VAA8,VAC2,VAG2,VC2,VC2N,VCN2,VD2,VDB2,VDE2,VEP9,VK2,VKB2 VKE4,VKX4,VM2,VN17,VN27,VNG1,VNS9,VPE4,VPE5,VPE7,VPE9,VPX4 VPX5,VPX7,VPX9,VS39,VS49,VSD,VSD4,VSD7,VSD9,VTH4,VWC,VWC7,VWC9 VWE,VWS,VWT4,VXB,VXB7,VXB9,VXE2,VXE4,VXE6,VXE7,VXE9,VXG,VXQ4
	87516-ZH7-000	MARK, OPERATOR CAUTION (ENGLISH)(MADE IN JAPAN)	1	1	-	-	--------	1626671	QK4,QKB2,QWA2,QXS4,SWA4,VD2,VEP9,VKB2,VPE5,VPE9,VPX5,VPX9,VWC VWC7,VWC9,VWE,VWS
	87516-ZH7-800	MARK, OPERATOR CAUTION(FRENCH) (MADE IN JAPAN)	1	-	-	-	--------	--------	LXE8,LXU,QA26,QAA2,QNE9,QTR2,QXB,QXEB,SXE7,SXE8,SXE9,SXEB,SXQ4 VE39,VEP7,VKE9,VKX9,VMA2,VME2,VMS2,VNG2,VWA2,VX39,VX8,VXE8 VXEB,VXG2,VXP7
	87516-ZH7-000	MARK, OPERATOR CAUTION (ENGLISH)(MADE IN JAPAN)	1	-	-	-	--------	--------	VEP7,VMS2,VXP7
			1	-	-	-	--------	1451029	QWA4,QWC4
2	87522-883-660	MARK, CAUTION (ENGLISH/FRENCH/SPANISH)	1	1	-	1	--------	--------	ED6,EDD2,EDS2,EDS6,EDT6,PXM8,VC2,VC2N,VWC,VWE,VXG
3	87528-ZH7-000	MARK, CHOKE(GRAY) ----------	1	-	-	-	--------	--------	QK4,QXS4,SWA4,VEP7,VXP7
			1	-	-	-	--------	1064962	ED6,EDD2,EDS2,EDS6,EDT6,EN6,ENT2,VC2,VE39,VKE4,VKE9,VKX4,VKX9 VMS2,VPE4,VPE5,VPE7,VPE9,VPX4,VPX5,VPX7,VPX9,VS39,VS49,VSD4 VTH4,VWC,VWE,VX39,VXG,VXG2
			1	-	-	-	--------	1451029	QWA4,QWC4
4	87529-ZE2-812	MARK, CONTROL BOX(EXP) ------	1	-	-	-	--------	--------	VEP7

OTHER PARTS(LABEL/TOOL)

Ref. No.	Part No.	Description	Reqd. QTY GX 390 U1	GX 390 R1	GX 390 U2	GX 390 R2	Serial No.		Parts catalogue code
5	87532-ZH7-000	MARK, THROTTLE INDICATION ···	1	-	-	-	--------	--------	QXS4,SWA4,VEP7,VXP7
			1	-	-	-	--------	1451029	QWA4,QWC4
6	87533-ZC0-630	MARK, AIR CLEANER(ENGLISH) ··	1	1	-	1	--------	--------	ED6,EDD2,EDS2,EDS6,EDT6,EN6,ENT2,VC2,VC2N,VE39,VEP9,VKE4,VKE9 VKX4,VKX9,VPE4,VPE5,VPE7,VPE9,VPX4,VPX5,VPX7,VPX9,VS39,VS49 VSD4,VTH4,VWC,VWE,VWS,VX39,VXG
7	87534-ZE1-841	LABEL, AIR CLEANER CAUTION ··	1	-	-	-	--------	--------	QXS4
			1	-	-	-	--------	1451029	QWA4,QWC4
8	87539-898-620	MARK, EX. CAUTION (ENGLISH/FRENCH)	1	-	-	-	--------	--------	ED6,EDD2,EDS2,EDS6,EDT6,VC2,VC2N,VWC,VWE,VWS,VXG
			-	1	-	1	--------	--------	ED6,EDD2,EDS2,EDS6,EDT6,VC2,VWC,VWE,VXG
9	87565-ZB4-A00	PLATE, FUEL INDICATION ·····	1	1	-	1	--------	--------	ED6,EDD2,PXM8
10	89216-ZB4-000	WRENCH, PLUG ·····	1	1	-	1	--------	--------	ED6,EDD2,EDS2,EDS6,EDT6,EN6,ENT2,VWS
11	89218-ZE1-000	WRENCH COMP., SPARK PLUG ····	1	1	-	-	--------	--------	VN27,VNG2,VNS9
12	87594-ZB4-A00	MARK, OIL CAUTION ·····	1	1	-	-	--------	--------	VWC,VWE
13	87528-898-620	MARK, CHOKE ·····	1	-	-	-	--------	--------	VC2N,VEP9,VWS
			1	-	-	-	1064963	--------	ED6,EDD2,EDS2,EDS6,EDT6,EN6,ENT2,VC2,VE39,VKE4,VKE9,VKX4,VKX9 VMS2,VPE4,VPE5,VPE7,VPE9,VPX4,VPX5,VPX7,VPX9,VS39,VS49,VSD4 VTH4,VWC,VWE,VX39,VXG,VXG2
			-	1	-	1	--------	--------	ED6,EDD2,EDS2,EDS6,EDT6,EN6,ENT2,VC2,VEP9,VKE4,VKX4,VPE4,VPE5 VPE7,VPE9,VPX4,VPX5,VPX7,VPX9,VS39,VS49,VSD4,VTH4,VWC,VWE,VWS VXG
14	87521-ZF6-W04	EMBLEM(HONDA GX390) ·····	1	1	-	1	--------	--------	VWS
15	87516-ZH7-801	MARK, OPERATOR CAUTION(FRENCH) (MADE IN JAPAN)	1	1	-	-	1626672	--------	ED6,EDD2,EDS2,EDS6,EDT6,EN6,ENT2,HA2,HJA2,LKE,LX2,LXE2,LXE4 LXQ4,PA2,PAE2,PXE8,PXM8,PXU,QA2,QAE2,QAE6,QAW,QC2,QDW9,QE,QHB4 QK4,QKA4,QKB2,QMEO,QNB2,QND,QNE2,QNE6,QNE8,QNK,QNR2,QNR6,QSC2 QWA2,QWA4,QWC4,QWH2,QWT2,QXB7,QXB9,QXC4,QXC6,QXC9,QXE4,QXE6 QXE7,QXE8,QXE9,QXH9,QXQ4,QXQ7,QXS4,QXU,SCK4,SHQ4,SM32,SMC1 SMD3,SMEO,SME6,SMX2,SNC,STC4,SWA4,SXB,SXB7,SXB9,SXE4,SXU,VA2 VAA1,VAA8,VAC2,VAG2,VC2,VC2N,VCN2,VD2,VDB2,VDE2,VEP9,VK2,VKB2 VKE4,VKX4,VM2,VN17,VN27,VNG1,VNS9,VPE4,VPE5,VPE7,VPE9,VPX4 VPX5,VPX7,VPX9,VS39,VS49,VSD,VSD4,VSD7,VSD9,VTH4,VWC,VWC7,VWC9 VWE,VWS,VWT4,VXB,VXB7,VXB9,VXE2,VXE4,VXE6,VXE7,VXE9,VXG,VXQ4
	87516-ZH7-010	MARK, OPERATOR CAUTION (ENGLISH)(MADE IN JAPAN)	1	-	1	-	--------	--------	PXU4,SM34,SMX4
	87516-ZH7-801	MARK, OPERATOR CAUTION(FRENCH) (MADE IN JAPAN)	1	-	-	-	--------	--------	PXU4,SM34,SMX4
	87516-ZH7-010	MARK, OPERATOR CAUTION (ENGLISH)(MADE IN JAPAN)	1	-	-	-	1626672	--------	QK4,QKB2,QWA2,QXS4,SWA4,VD2,VEP9,VKB2,VPE4,VPE5,VPE9,VPX5,VPX9 VWC,VWC7,VWC9,VWE,VWS
			-	1	-	-	1626672	--------	QKB2,QWA2,VD2,VEP9,VKB2,VKX4,VN17,VNS9,VPE4,VPE5,VPE7,VPE9 VPX4,VPX5,VPX7,VPX9,VS39,VWC,VWC7,VWC9,VWE,VWS
	87516-ZH7-801	MARK, OPERATOR CAUTION(FRENCH) (MADE IN JAPAN)	-	-	1	1			
	87516-ZH7-010	MARK, OPERATOR CAUTION (ENGLISH)(MADE IN JAPAN)	-	-	-	1	--------	--------	VWS

2

OTHER PARTS(LABEL/TOOL)

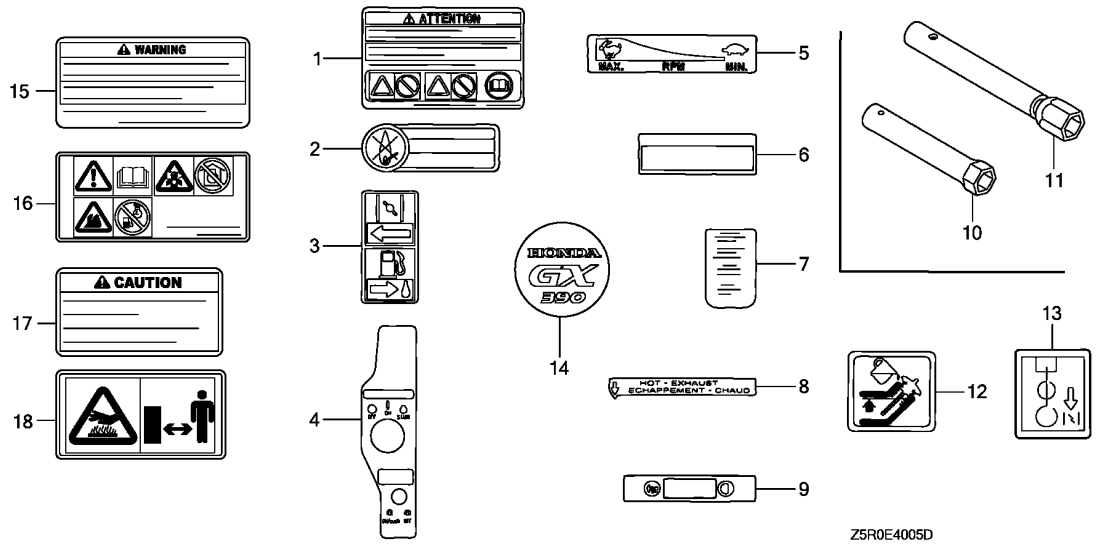

Ref. No.	Part No.	Description	Reqd. QTY GX 390 U1	GX 390 R1	GX 390 U2	GX 390 R2	Serial No.	Parts catalogue code
16	87519-ZH7-000	MARK, OPERATOR CAUTION (PICTOGRAPH)	1	-	-	-	1626672 --------	ED6,EDD2,EDS2,EDS6,EDT6,EN6,ENT2,HA2,HJA2,LKE,LX2,LXE2,LXE4 LXQ4,PA2,PAE2,PXE8,PXU,QA2,QAE2,QAE6,QAW,QC2,QDW9,QE,QHB4,QK4 QKA4,QKB2,QMEO,QNB2,QND,QNE2,QNE6,QNE8,QNK,QNR2,QNR6,QSC2,QWA2 QWA4,QWC4,QWH2,QWT2,QXB7,QXB9,QXC4,QXC6,QXC9,QXE4,QXE6,QXE7 QXE8,QXE9,QXH9,QXQ4,QXQ7,QXS4,QXU,SCK4,SHQ4,SM32,SMC1,SMD3 SMEO,SME6,SMX2,SNC,STC4,SWA4,SXB,SXB7,SXB9,SXE4,SXU,VA2,VAA1 VAA8,VAC2,VAG2,VC2,VC2N,VCN2,VD2,VDB2,VDE2,VEP9,VK2,VKB2,VKE4 VKX4,VM2,VN17,VN27,VNG1,VNS9,VPE5,VPE7,VPE9,VPX4,VPX5,VPX7 VPX9,VS39,VS49,VSD,VSD4,VSD7,VSD9,VTH4,VWC,VWC7,VWC9,VWE,VWS VWT4,VXB,VXB7,VXB9,VXE2,VXE4,VXE6,VXE7,VXE9,VXG,VXQ4
			-	1	-	-	1626672 --------	ED6,EDD2,EDS2,EDS6,EDT6,EN6,ENT2,PXM8,QKB2,QNB2,QWA2,VAA1,VAA8 VAC2,VAG2,VC2,VCN2,VD2,VDB2,VDE2,VEP9,VK2,VKB2,VKE4,VNG1,VPE5 VPE9,VPX5,VPX9,VS49,VSD4,VTH4,VWC,VWC7,VWC9,VWE,VWS,VWT4,VXG
			-	-	1	1	-------- --------	ED6,EDD2,EDS6,EDT6,EN6,ENT2,PXE8,PXM8,PXU,QXE8,QXU,SM32,SMX2 SXE4,VWS
17	87539-ZOJ-810	MARK, EX. CAUTION(FRENCH) ---	1	1	-	-	1626672 --------	HA2,HJA2,LKE,LX2,LXE2,LXE4,LXQ4,PA2,PAE2,PXE8,PXM8,PXU,QA2 QAE2,QAE6,QAW,QC2,QDW9,QE,QHB4,QK4,QKA4,QKB2,QMEO,QNB2,QND QNE2,QNE6,QNE8,QNK,QNR2,QNR6,QSC2,QWA2,QWA4,QWC4,QWH2,QWT2 QXB7,QXB9,QXC4,QXC6,QXC9,QXE4,QXE6,QXE7,QXE8,QXE9,QXH9,QXQ4 QXQ7,QXS4,QXU,SCK4,SHQ4,SM32,SMC1,SMD3,SMEO,SME6,SMX2,SNC,STC4 SWA4,SXB,SXB7,SXB9,SXE4,SXU,VA2,VAC2,VAG2,VCN2,VD2,VDB2,VDE2 VK2,VKB2,VM2,VN17,VN27,VNG1,VNS9,VSD,VSD7,VSD9,VWC7,VWC9,VXB VXB7,VXB9,VXE2,VXE4,VXE6,VXE7,VXE9,VXQ4
	87539-ZOJ-000	MARK, EX. CAUTION(ENGLISH) --	1	-	1	1	-------- --------	PXM8,PXU4,SM34,SMX4
	87539-ZOJ-810	MARK, EX. CAUTION(FRENCH) ---	1	-	-	1	-------- --------	PXM8,PXU4,SM34,SMX4
	87539-ZOJ-000	MARK, EX. CAUTION(ENGLISH) --	1	-	-	-	1626672 --------	QK4,QKB2,QWA2,QXS4,SWA4,VD2,VKB2,VWC7,VWC9
			-	1	-	-	1626672 --------	QKB2,QWA2,VD2,VDB2,VKB2,VN17,VNS9,VWC7,VWC9
	87539-ZOJ-810	MARK, EX. CAUTION(FRENCH) ---	-	-	1	-		

OTHER PARTS(LABEL/TOOL)

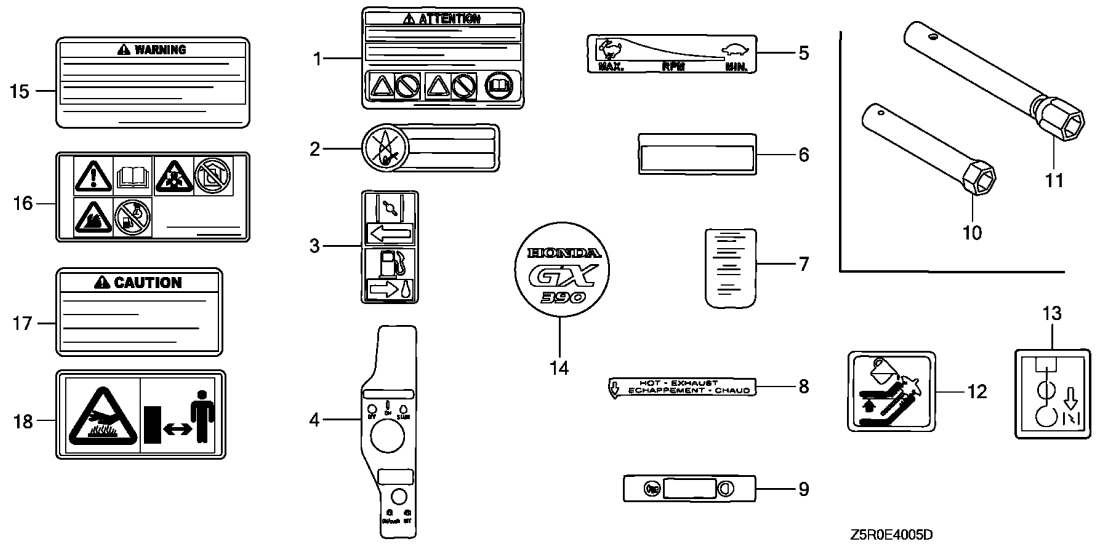

Ref. No.	Part No.	Description	Reqd. QTY GX 390 U1	GX 390 R1	GX 390 U2	GX 390 R2	Serial No.	Parts catalogue code
18	87539-ZOJ-800	MARK, EX. CAUTION(PICTOGRAPH)	1	-	-	-	1626672 --------	HA2,HJA2,LKE,LX2,LXE2,LXE4,LXQ4,PA2,PAE2,PXE8,PXU,QA2,QAE2 QAE6,QAW,QC2,QDW9,QE,QHB4,QKA4,QMEO,QND,QNE2,QNE6,QNE8,QNK QNR2,QNR6,QSC2,QWA4,QWC4,QWH2,QWT2,QXB7,QXB9,QXC4,QXC6,QXC9 QXE4,QXE6,QXE7,QXE8,QXE9,QXH9,QXQ4,QXQ7,QXU,SCK4,SHQ4,SM32 SMC1,SMD3,SMEO,SME6,SMX2,SNC,STC4,SXB,SXB7,SXB9,SXE4,SXU,VA2 VM2,VN27,VSD,VSD7,VSD9,VXB,VXB7,VXB9,VXE2,VXE4,VXE6,VXE7,VXE9 VXQ4
			-	-	1	-	-------- --------	PXE8,PXU,QXE8,QXU,SM32,SMX2,SXE4

OTHER PARTS(MUFFLER)(2)

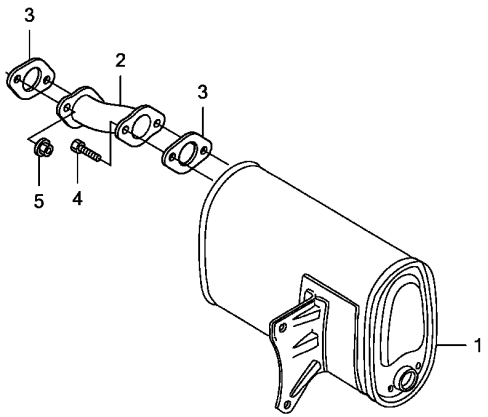

Z5R0E4006

Ref. No.	L.O.N.	(Relative ref. Number) Description	F.R.T.

Ref. No.	Part No.	Description	Reqd. QTY GX 390 U1	GX 390 R1	GX 390 U2	GX 390 R2	Serial No.		Parts catalogue code
1	18310-ZB8-003	MUFFLER COMP.	1	1	-	-	--------	--------	VEP9
2	18330-ZB8-003	PIPE COMP., EX.	1	1	-	-	--------	--------	VEP9
3	18333-ZB7-800	GASKET, EX. PIPE	2	2	-	-	--------	--------	VEP9
4	92101-08028-0A	BOLT, HEX., 8X28	2	2	-	-	--------	--------	VEP9
5	94050-08000	NUT, FLANGE, 8MM	2	2	-	-	--------	--------	VEP9

OTHER PARTS(AIR CLEANER)(2)

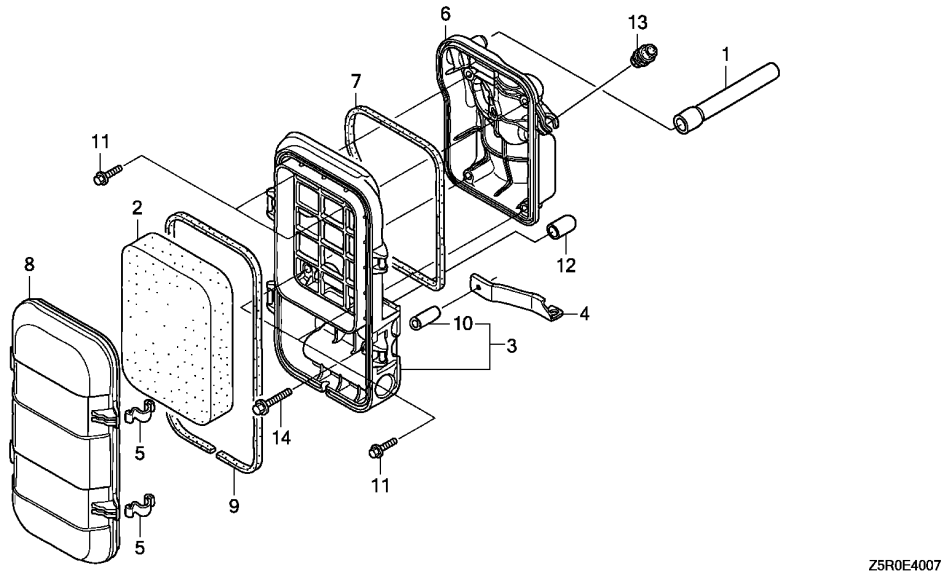

Ref. No.	L.O.N.	(Relative ref. Number) Description	F.R.T.

Ref. No.	Part No.	Description	Reqd. QTY GX 390 U1	GX 390 R1	GX 390 U2	GX 390 R2	Serial No.		Parts catalogue code
1	15721-Z23-H60	TUBE, BREATHER	-	-	-	1	--------	--------	EDS6,EDT6
2	17211-899-000	ELEMENT, AIR CLEANER	-	-	-	1	--------	--------	EDS6,EDT6
3	17220-Z23-S30	CASE COMP., AIR CLEANER	-	-	-	1	--------	--------	EDS6,EDT6
4	17222-Z23-H60	STAY, AIR CLEANER	-	-	-	1	--------	--------	EDS6,EDT6
5	17223-Z23-000	SPRING, AIR CLEANER CASE LID	-	-	-	2	--------	--------	EDS6,EDT6
6	17223-Z23-S30	BASE COMP., AIR CLEANER	-	-	-	1	--------	--------	EDS6,EDT6
7	17229-Z23-H60	SEAL, AIR CLEANER CASE	-	-	-	1	--------	--------	EDS6,EDT6
8	17231-Z23-H60	COVER, AIR CLEANER	-	-	-	1	--------	--------	EDS6,EDT6
9	17233-Z23-H60	SEAL, AIR CLEANER COVER	-	-	-	1	--------	--------	EDS6,EDT6
10	17238-ZE7-710	COLLAR, AIR CLEANER	-	-	-	1	--------	--------	EDS6,EDT6
11	90005-ZM3-000	BOLT, FLANGE, 5X18	-	-	-	4	--------	--------	EDS6,EDT6
12	90802-Z6L-000	CAP, SEALING	-	-	-	1	--------	--------	EDS6,EDT6
13	90854-ZB3-000	RUBBER, FUEL(9X15X20)	-	-	-	1	--------	--------	EDS6,EDT6
14	95701-06032-08	BOLT, FLANGE, 6X32	-	-	-	1	--------	--------	EDS6,EDT6

OTHER PARTS(RECOIL STARTER)

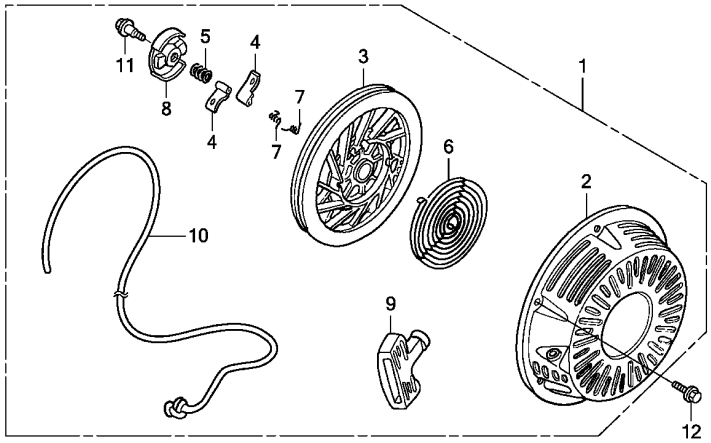

Z5R0E4008

Ref. No.	L.O.N.	(Relative ref. Number) Description	F.R.T.

Ref. No.	Part No.	Description	Reqd. QTY GX 390 U1	GX 390 R1	GX 390 U2	GX 390 R2	Serial No.		Parts catalogue code
1	28400-ZE3-W02ZB	STARTER ASSY., RECOIL							
		NH1.....BLACK	-	-	-	1	--------	--------	VWS
2	28410-ZE3-W01ZB	CASE COMP., RECOIL STARTER							
		NH1.....BLACK	-	-	-	1	--------	--------	VWS
3	28421-ZE3-W01	PULLEY, RECOIL STARTER	-	-	-	1	--------	--------	VWS
4	28422-ZE2-W01	RATCHET, STARTER	-	-	-	2	--------	--------	VWS
5	28441-ZE2-W01	SPRING, FRICTION	-	-	-	1	--------	--------	VWS
6	28442-ZE2-W01	SPRING, STARTER RETURN	-	-	-	1	--------	--------	VWS
7	28443-ZE2-W01	SPRING, RATCHET	-	-	-	2	--------	--------	VWS
8	28444-ZE2-W01	RETAINER, SPRING	-	-	-	1	--------	--------	VWS
9	28461-ZE2-W03	GRIP, STARTER	-	-	-	1	--------	--------	VWS
10	28462-ZE3-W01	ROPE, RECOIL STARTER	-	-	-	1	--------	--------	VWS
11	90004-ZE2-W01	SCREW, CENTER	-	-	-	1	--------	--------	VWS
12	90008-ZE2-003	BOLT, FLANGE, 6X10	-	-	-	3	--------	--------	VWS

EOP-1 GASKET KIT

L16

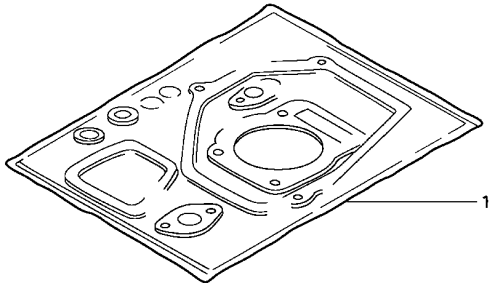

HENG-X0003

Ref. No.	L.O.N.	(Relative ref. Number) Description	F.R.T.

Ref. No.	Part No.	Description	Reqd. QTY GX 390 U1	GX 390 R1	GX 390 U2	GX 390 R2	Serial No.		Parts catalogue code
1	06111-ZF6-W81	GASKET KIT ----------	1	1	-	1	--------	--------	EDD2,ENT2
	06111-ZF6-R81	----------	1	1	-	-	--------	--------	LX2,QND,QNR2,QNR6,VDE2,VM2,VMA2,VME2

2

MUFFLER COVER

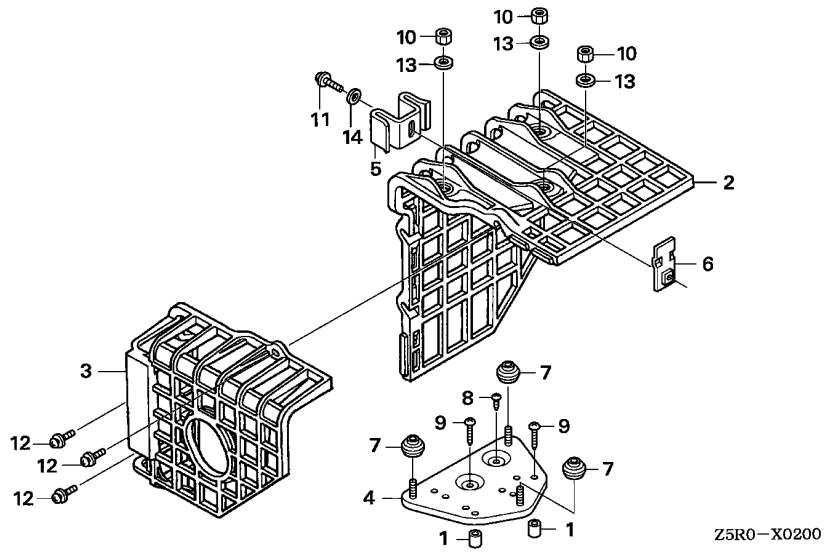

Ref. No.	L.O.N.	(Relative ref. Number) Description	F.R.T.

Ref. No.	Part No.	Description	Reqd. QTY GX 390 U1	GX 390 R1	GX 390 U2	GX 390 R2	Serial No.		Parts catalogue code
1	17233-896-701	COLLAR, AIR CLEANER CASE	(2)	(2)	(2)	-	--------	--------	LKE,LXE4,LXQ4,QE,QHB4,QK4,QKA4,QMEO,QWA4,QWC4,QXB,QXB7,QXB9 QXC4,QXE4,QXE7,QXE9,QXEB,QXH9,QXQ4,QXQ7,SCK4,SHQ4,SMC1,SMD3 SMEO,SME6,SNC,STC4,SWA4,SXB,SXB7,SXB9,SXE4,SXE7,SXE9,SXEB,SXQ4 VEP7,VN17,VN27,VNG1,VNG2,VNS9,VPE4,VPE5,VPE7,VPX4,VPX5,VPX7 VSD,VSD7,VSD9,VWC7,VWC9,VWT4,VXB,VXB7,VXB9,VXE4,VXE7,VXE9,VXEB VXP7,VXQ4
2	18433-ZF6-W40	COVER COMP., MUFFLER	(1)	(1)	(1)	-	--------	--------	LKE,LXE4,LXQ4,QE,QHB4,QK4,QKA4,QMEO,QWA4,QWC4,QXB,QXB7,QXB9 QXC4,QXE4,QXE7,QXE9,QXEB,QXH9,QXQ4,QXQ7,SCK4,SHQ4,SMC1,SMD3 SMEO,SME6,SNC,STC4,SWA4,SXB,SXB7,SXB9,SXE4,SXE7,SXE9,SXEB,SXQ4 VEP7,VN17,VN27,VNG1,VNG2,VNS9,VPE4,VPE5,VPE7,VPX4,VPX5,VPX7 VSD,VSD7,VSD9,VWC7,VWC9,VWT4,VXB,VXB7,VXB9,VXE4,VXE7,VXE9,VXEB VXP7,VXQ4
3	18434-ZF6-W40	COVER COMP., RR. MUFFLER	(1)	(1)	(1)	-	--------	--------	LKE,LXE4,LXQ4,QE,QHB4,QK4,QKA4,QMEO,QWA4,QWC4,QXB,QXB7,QXB9 QXC4,QXE4,QXE7,QXE9,QXEB,QXH9,QXQ4,QXQ7,SCK4,SHQ4,SMC1,SMD3 SMEO,SME6,SNC,STC4,SWA4,SXB,SXB7,SXB9,SXE4,SXE7,SXE9,SXEB,SXQ4 VEP7,VN17,VN27,VNG1,VNG2,VNS9,VPE4,VPE5,VPE7,VPX4,VPX5,VPX7 VSD,VSD7,VSD9,VWC7,VWC9,VWT4,VXB,VXB7,VXB9,VXE4,VXE7,VXE9,VXEB VXP7,VXQ4
4	18436-ZH8-W40	BASE COMP., MUFFLER COVER	(1)	(1)	(1)	-	--------	--------	LKE,LXE4,LXQ4,QE,QHB4,QK4,QKA4,QMEO,QWA4,QWC4,QXB,QXB7,QXB9 QXC4,QXE4,QXE7,QXE9,QXEB,QXH9,QXQ4,QXQ7,SCK4,SHQ4,SMC1,SMD3 SMEO,SME6,SNC,STC4,SWA4,SXB,SXB7,SXB9,SXE4,SXE7,SXE9,SXEB,SXQ4 VEP7,VN17,VN27,VNG1,VNG2,VNS9,VPE4,VPE5,VPE7,VPX4,VPX5,VPX7 VSD,VSD7,VSD9,VWC7,VWC9,VWT4,VXB,VXB7,VXB9,VXE4,VXE7,VXE9,VXEB VXP7,VXQ4

MUFFLER COVER

Ref. No.	Part No.	Description	Reqd. QTY GX 390 U1	GX 390 R1	GX 390 U2	GX 390 R2	Serial No.		Parts catalogue code
5	18437-ZF6-W40	STAY, MUFFLER COVER	(1)	(1)	(1)	-	--------	--------	LKE,LXE4,LXQ4,QE,QHB4,QK4,QKA4,QMEO,QWA4,QWC4,QXB,QXB7,QXB9 QXC4,QXE4,QXE7,QXE9,QXEB,QXH9,QXQ4,QXQ7,SCK4,SHQ4,SMC1,SMD3 SMEO,SME6,SNC,STC4,SWA4,SXB,SXB7,SXB9,SXE4,SXE7,SXE9,SXEB,SXQ4 VEP7,VN17,VN27,VNG1,VNG2,VNS9,VPE4,VPE5,VPE7,VPX4,VPX5,VPX7 VSD,VSD7,VSD9,VWC7,VWC9,VWT4,VXB,VXB7,VXB9,VXE4,VXE7,VXE9,VXEB VXP7,VXQ4
6	18438-ZF6-W40	PLATE, SET	(1)	(1)	(1)	-	--------	--------	LKE,LXE4,LXQ4,QE,QHB4,QK4,QKA4,QMEO,QWA4,QWC4,QXB,QXB7,QXB9 QXC4,QXE4,QXE7,QXE9,QXEB,QXH9,QXQ4,QXQ7,SCK4,SHQ4,SMC1,SMD3 SMEO,SME6,SNC,STC4,SWA4,SXB,SXB7,SXB9,SXE4,SXE7,SXE9,SXEB,SXQ4 VEP7,VN17,VN27,VNG1,VNG2,VNS9,VPE4,VPE5,VPE7,VPX4,VPX5,VPX7 VSD,VSD7,VSD9,VWC7,VWC9,VWT4,VXB,VXB7,VXB9,VXE4,VXE7,VXE9,VXEB VXP7,VXQ4
7	18466-ZH8-W40	SPACER, MUFFLER COVER	(3)	(3)	(3)	-	--------	--------	LKE,LXE4,LXQ4,QE,QHB4,QK4,QKA4,QMEO,QWA4,QWC4,QXB,QXB7,QXB9 QXC4,QXE4,QXE7,QXE9,QXEB,QXH9,QXQ4,QXQ7,SCK4,SHQ4,SMC1,SMD3 SMEO,SME6,SNC,STC4,SWA4,SXB,SXB7,SXB9,SXE4,SXE7,SXE9,SXEB,SXQ4 VEP7,VN17,VN27,VNG1,VNG2,VNS9,VPE4,VPE5,VPE7,VPX4,VPX5,VPX7 VSD,VSD7,VSD9,VWC7,VWC9,VWT4,VXB,VXB7,VXB9,VXE4,VXE7,VXE9,VXEB VXP7,VXQ4
8	90050-ZE1-000	SCREW, TAPPING, 5X8	(1)	(1)	(1)	-	--------	--------	LKE,LXE4,LXQ4,QE,QHB4,QK4,QKA4,QMEO,QWA4,QWC4,QXB,QXB7,QXB9 QXC4,QXE4,QXE7,QXE9,QXEB,QXH9,QXQ4,QXQ7,SCK4,SHQ4,SMC1,SMD3 SMEO,SME6,SNC,STC4,SWA4,SXB,SXB7,SXB9,SXE4,SXE7,SXE9,SXEB,SXQ4 VEP7,VN17,VN27,VNG1,VNG2,VNS9,VPE4,VPE5,VPE7,VPX4,VPX5,VPX7 VSD,VSD7,VSD9,VWC7,VWC9,VWT4,VXB,VXB7,VXB9,VXE4,VXE7,VXE9,VXEB VXP7,VXQ4
9	90050-ZH8-W40	SCREW, TAPPING, 5X25	(2)	(2)	(2)	-	--------	--------	LKE,LXE4,LXQ4,QE,QHB4,QK4,QKA4,QMEO,QWA4,QWC4,QXB,QXB7,QXB9 QXC4,QXE4,QXE7,QXE9,QXEB,QXH9,QXQ4,QXQ7,SCK4,SHQ4,SMC1,SMD3 SMEO,SME6,SNC,STC4,SWA4,SXB,SXB7,SXB9,SXE4,SXE7,SXE9,SXEB,SXQ4 VEP7,VN17,VN27,VNG1,VNG2,VNS9,VPE4,VPE5,VPE7,VPX4,VPX5,VPX7 VSD,VSD7,VSD9,VWC7,VWC9,VWT4,VXB,VXB7,VXB9,VXE4,VXE7,VXE9,VXEB VXP7,VXQ4
10	90302-KF9-900	NUT, HEX., 5MM	(3)	(3)	(3)	-	--------	--------	LKE,LXE4,LXQ4,QE,QHB4,QK4,QKA4,QMEO,QWA4,QWC4,QXB,QXB7,QXB9 QXC4,QXE4,QXE7,QXE9,QXEB,QXH9,QXQ4,QXQ7,SCK4,SHQ4,SMC1,SMD3 SMEO,SME6,SNC,STC4,SWA4,SXB,SXB7,SXB9,SXE4,SXE7,SXE9,SXEB,SXQ4 VEP7,VN17,VN27,VNG1,VNG2,VNS9,VPE4,VPE5,VPE7,VPX4,VPX5,VPX7 VSD,VSD7,VSD9,VWC7,VWC9,VWT4,VXB,VXB7,VXB9,VXE4,VXE7,VXE9,VXEB VXP7,VXQ4
11	93891-05012-00	SCREW-WASHER, 5X12	(1)	(1)	(1)	-	--------	--------	LKE,LXE4,LXQ4,QE,QHB4,QK4,QKA4,QMEO,QWA4,QWC4,QXB,QXB7,QXB9 QXC4,QXE4,QXE7,QXE9,QXEB,QXH9,QXQ4,QXQ7,SCK4,SHQ4,SMC1,SMD3 SMEO,SME6,SNC,STC4,SWA4,SXB,SXB7,SXB9,SXE4,SXE7,SXE9,SXEB,SXQ4 VEP7,VN17,VN27,VNG1,VNG2,VNS9,VPE4,VPE5,VPE7,VPX4,VPX5,VPX7 VSD,VSD7,VSD9,VWC7,VWC9,VWT4,VXB,VXB7,VXB9,VXE4,VXE7,VXE9,VXEB VXP7,VXQ4
12	93891-06020-07	SCREW-WASHER, 6X20	(3)	(3)	(3)	-	--------	--------	LKE,LXE4,LXQ4,QE,QHB4,QK4,QKA4,QMEO,QWA4,QWC4,QXB,QXB7,QXB9 QXC4,QXE4,QXE7,QXE9,QXEB,QXH9,QXQ4,QXQ7,SCK4,SHQ4,SMC1,SMD3 SMEO,SME6,SNC,STC4,SWA4,SXB,SXB7,SXB9,SXE4,SXE7,SXE9,SXEB,SXQ4 VEP7,VN17,VN27,VNG1,VNG2,VNS9,VPE4,VPE5,VPE7,VPX4,VPX5,VPX7 VSD,VSD7,VSD9,VWC7,VWC9,VWT4,VXB,VXB7,VXB9,VXE4,VXE7,VXE9,VXEB VXP7,VXQ4
13	94103-05700	WASHER, PLAIN, 5MM	(3)	(3)	(3)	-	--------	--------	LKE,LXE4,LXQ4,QE,QHB4,QK4,QKA4,QMEO,QWA4,QWC4,QXB,QXB7,QXB9 QXC4,QXE4,QXE7,QXE9,QXEB,QXH9,QXQ4,QXQ7,SCK4,SHQ4,SMC1,SMD3 SMEO,SME6,SNC,STC4,SWA4,SXB,SXB7,SXB9,SXE4,SXE7,SXE9,SXEB,SXQ4 VEP7,VN17,VN27,VNG1,VNG2,VNS9,VPE4,VPE5,VPE7,VPX4,VPX5,VPX7 VSD,VSD7,VSD9,VWC7,VWC9,VWT4,VXB,VXB7,VXB9,VXE4,VXE7,VXE9,VXEB VXP7,VXQ4

MUFFLER COVER

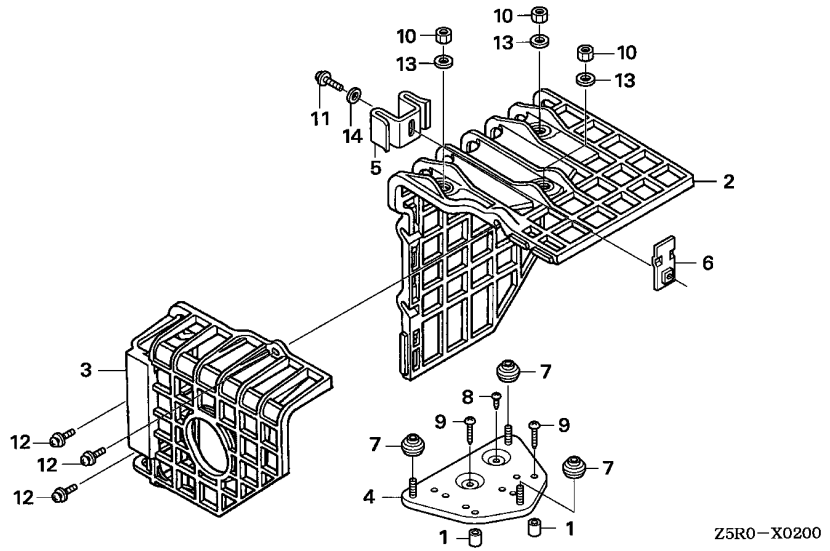

Ref. No.	Part No.	Description	Reqd. QTY GX 390 U1	GX 390 R1	GX 390 U2	GX 390 R2	Serial No.	Parts catalogue code
14	94111-05000	WASHER, SPRING, 5MM	(1)	(1)	(1)	-	-------- --------	LKE,LXE4,LXQ4,QE,QHB4,QK4,QKA4,QMEO,QWA4,QWC4,QXB,QXB7,QXB9 QXC4,QXE4,QXE7,QXE9,QXEB,QXH9,QXQ4,QXQ7,SCK4,SHQ4,SMC1,SMD3 SMEO,SME6,SNC,STC4,SWA4,SXB,SXB7,SXB9,SXE4,SXE7,SXE9,SXEB,SXQ4 VEP7,VN17,VN27,VNG1,VNG2,VNS9,VPE4,VPE5,VPE7,VPX4,VPX5,VPX7 VSD,VSD7,VSD9,VWC7,VWC9,VWT4,VXB,VXB7,VXB9,VXE4,VXE7,VXE9,VXEB VXP7,VXQ4

PART NO. INDEX

N 1

Part Number	Address	Page	Ref.
06000			
06111-ZF6-R81	L16	161	1
06111-ZF6-W81	L16	161	1
11000			
11300-ZE3-040	E9	42	1
11300-ZE3-604	E9	42	1
11300-ZE3-614	E15	48	1
11300-ZE3-P70	E9	42	1
11300-ZF6-W32	E15	48	1
11381-Z5T-000	E10	43	2
11381-ZE3-801	E9	42	2
	E15	48	2
11500-ZE3-611	K8	137	1
11500-ZE3-640	K9	138	1
11521-ZE2-800	K8	137	2
	K9	138	2
12000			
12000-Z5T-405	E5	38	1
12000-Z5T-407	E5	38	1
12000-ZF6-416	E5	38	1
12000-ZF6-417	E5	38	1
12000-ZF6-418	E5	38	1
12000-ZF6-435	E5	38	1
12200-ZF6-406	E1	34	1
12204-ZE2-306	E1	34	2
12205-ZE2-305	E1	34	3
12209-ZE8-003	F11	60	1
12210-Z5T-406	E1	34	1
12216-ZE2-300	E1	34	4
12251-Z1C-801	E1	34	5
12251-Z5T-003	E1	34	5
12251-ZF6-W00	E1	34	5
12310-Z5T-000	E1	34	6
12310-ZE2-020	E1	34	6
12310-ZE3-791	E1	34	6
12315-ZE3-840	E2	35	7
12357-Z5T-010	E2	35	7
12391-ZE2-020	E2	35	8
13000			
13010-Z5R-004	F3	52	1
	F6	55	1
	F7	56	1
13010-ZF6-003	F3	52	1
13010-ZF6-005	F4	53	1
13011-Z5R-004	F3	52	1
	F6	55	1
	F7	56	1
13011-ZF6-003	F4	53	1
13011-ZF6-005	F4	53	1
13012-Z5R-004	F3	52	1
	F6	55	1
	F7	56	1
13012-ZF6-003	F4	53	1
13012-ZF6-005	F5	54	1
13013-Z5R-004	F3	52	1
	F7	56	1
13013-ZF6-003	F5	54	1
13013-ZF6-005	F6	55	1
13101-Z5T-800	F10	59	2
13101-ZF6-W00	F8	57	2
13101-ZF6-W01	F7	56	2
	F9	58	2
	F10	59	2
13102-Z5T-800	F10	59	2
13102-ZF6-W00	F8	57	2
13102-ZF6-W01	F7	56	2
	F9	58	2
	F10	59	2
13103-Z5T-800	F10	59	2
13103-ZF6-W00	F8	57	2
13103-ZF6-W01	F7	56	2
	F10	59	2
13104-Z5T-800	F10	59	2
13104-ZF6-W00	F8	57	2
13104-ZF6-W01	F7	56	2
	F10	59	2
13111-Z5T-000	F10	59	3
13111-ZF6-W00	F10	59	3
13200-ZE3-020	F10	59	4
13200-ZE3-315	F10	59	4
13310-ZF6-D41	E16	49	1
13310-ZF6-D42	E16	49	1
13310-ZF6-W11	E16	49	2
13310-ZF6-W12	E16	49	2
13310-ZF6-W21	E16	49	3
13310-ZF6-W22	E16	49	3
13310-ZF6-W31	E16	49	4
13310-ZF6-W32	E16	49	4
13310-ZF6-W41	E16	49	5
13310-ZF6-W42	E16	49	5
	F1	50	5
13310-ZF6-W61	F1	50	6
13310-ZF6-W62	F1	50	6
13310-ZF6-W71	F1	50	7
13310-ZF6-W72	F1	50	7
13310-ZK6-010	E16	49	5
13310-ZK6-020	F1	50	5
13310-ZK6-601	E16	49	5
13310-ZK6-602	E16	49	5
13310-ZK6-671	E16	49	5
13310-ZK6-672	E16	49	5
	F1	50	5
13351-ZE3-010	F1	50	8
14000			
14100-Z5T-810	F11	60	2
14100-ZF6-W01	F11	60	2
14100-ZK6-870	F11	60	2
14100-ZK6-880	F11	60	2
14410-ZE3-013	F11	60	3
14410-ZK6-880	F12	61	18
14431-ZE2-010	F11	60	4
14441-ZE2-000	F12	61	5
14451-ZE1-013	F12	61	6
14568-ZE1-000	F12	61	7
14711-Z5T-000	F12	61	8
14711-ZE3-000	F12	61	8
14721-Z5T-000	F12	61	9
14721-Z5T-800	F12	61	9
14721-ZE3-000	F12	61	9
14721-ZE3-810	F12	61	9
14751-ZE2-003	F12	61	10
14771-ZE2-000	F12	61	11
			12
14773-ZE2-000	F12	61	12
14775-ZE2-010	F12	61	13
14781-ZE2-000	F12	61	14
14791-ZE2-010	F12	61	15
14791-ZK6-880	F12	61	19
15000			
15510-ZE2-043	E6	39	2
15510-ZE2-053	E6	39	2
15600-735-003	E10	43	5
			6
	E15	48	4
15600-ZG4-003	E10	43	3
			4
	E15	48	3
15625-ZE1-003	E10	43	7
	E15	48	5
15721-Z23-H60	L14	159	1
15721-ZB4-000	E2	35	7
	L3	148	1
16000			
16010-ZA0-921	G14	79	1
16010-ZE2-812	G5	70	1
16010-ZE3-701	G14	79	1
16011-ZA0-931	G5	70	2
	G14	79	2
16013-Z1C-003	G6	71	3
16013-ZA0-931	G6	71	3
	G14	79	3
16015-Z5T-901	G6	71	4
16015-ZA0-931	G14	79	4
16015-ZE8-005	G6	71	4
16016-ZF6-005	G13	78	38
16016-ZH7-W01	G6	71	5
16016-ZH8-W01	G14	79	5
16024-124-760	G14	79	6
	G15	80	6
16024-124-761	G14	79	6
16024-Z5T-901	G6	71	6
16024-ZE1-811	G6	71	6
16028-Z5T-901	G6	71	7
16028-ZA0-701	G15	80	7
16028-ZA0-931	G15	80	7
16028-ZE0-005	G6	71	7
16044-Z5T-901	G7	72	8
16044-ZE3-W20	G7	72	8
16100-Z1C-901	G7	72	9
16100-Z5R-741	G15	80	8
	G16	81	8
16100-Z5R-742	G16	81	8
16100-Z5R-U71	G15	80	8
	G16	81	8
16100-Z5R-V41	G15	80	8
	G16	81	8
16100-Z5S-P91	G15	80	8
	G16	81	8
16100-Z5S-U31	G15	80	8
	G16	81	8
16100-Z5S-U32	G16	81	8
16100-ZBH-V41	G16	81	8
16100-ZF6-742	G15	80	8
16100-ZF6-V01	G7	72	9
16100-ZF6-V21	G7	72	9
16100-ZF6-V41	G15	80	8
16100-ZF6-V51	G7	72	9
16100-ZF6-W12	G7	72	9
16100-ZF6-W41	G7	72	9
16100-ZF6-W51	G7	72	9
16100-ZK6-P92	G15	80	8
16100-ZK6-U33	G15	80	8
16100-ZK6-U72	G15	80	8
16124-ZE0-005	G8	73	10
	G16	81	9
16148-141-881	G16	81	10
16166-Z5T-901	G8	73	11
16166-ZF6-005	G16	81	11
16166-ZF6-V00	G8	73	11
16166-ZF6-W10	G8	73	11
16166-ZF6-W20	G8	73	11
16166-ZF6-W50	G8	73	11
16172-ZE3-W10	G8	73	12
	G16	81	12
16173-001-004	G8	73	13
	I12	109	1
	L7	152	1
16199-ZA0-930	G16	81	13
16211-Z5T-000	G8	73	15
16211-ZBH-700	G16	81	14
16211-ZF6-000	G8	73	15
	G16	81	15
16211-ZF6-D40	G8	73	14
	G16	81	14
16212-Z5T-000	G13	78	39
	H4	85	53
16220-ZA0-702	G9	74	16
	H4	85	55
16221-Z5T-000	G9	74	17
	G16	81	16
16221-ZF6-800	G9	74	17
	G16	81	16
16223-ZE3-W00	G10	75	18
	G16	81	17
16230-ZE3-701	G16	81	18
16230-ZE3-702	G16	81	18
16260-ZE2-722	H1	82	19
16260-ZE2-723	H1	82	19
16260-ZE3-D21	H1	82	19
16260-ZE3-D22	G16	81	19
	H1	82	19
16260-ZF6-U70	H1	82	19
	L2	147	1
16261-ZE2-702	H1	82	20
	L2	147	2
16262-ZE2-711	H1	82	21
	L2	147	3
16263-ZA0-000	H1	82	22
	L2	147	4
16264-ZE2-701	H1	82	23
	L2	147	5
16265-ZE2-721	H2	83	24
	L2	147	6
16268-893-000	J16	129	1
16268-ZE2-721	H2	83	25
	L2	147	7
16269-ZA0-800	H2	83	26
	H4	85	54
	L2	147	8
16271-ZE2-010	H5	86	1
	H9	90	1
16400-ZE2-703	H2	83	27
16400-ZE2-704	H2	83	27
16500-Z5T-800	J12	125	7
16500-Z5T-810	J12	125	6
16500-Z5T-880	J12	125	8
16500-Z5T-890	J12	125	8
16500-ZE2-702	K15	144	1
16500-ZE2-703	K15	144	1
16510-ZE3-000	E10	43	8
	E15	48	6
16511-ZE8-000	E11	44	9
	E15	48	7
16512-ZE3-000	E11	44	10
	E15	48	8
16513-ZE2-000	E12	45	11
	E15	48	9
16531-Z0A-000	E12	45	12
	E15	48	10
16541-ZE3-010	E6	39	3
16550-ZE3-700	J11	124	1
16551-ZE3-000	J11	124	2
16555-ZE3-000	J11	124	3
16561-ZE3-000	J11	124	4
	J12	125	4
16561-ZE3-710	J11	124	4
16561-ZF6-T21	J11	124	4
16561-ZF6-W31	J11	124	4
16561-ZF6-W32	J12	125	4
16561-ZK6-D70	J12	125	4
16562-ZE3-000	J12	125	5
16562-ZE3-700	J12	125	5

3

Part Number	Address	Page	Ref.
16570-ZE3-700	J12	125	8
16570-ZE3-710	J12	125	8
16570-ZE3-721	J12	125	9
16570-ZE3-W00	J15	128	31
16570-ZE3-W10	J12	125	7
16570-ZE3-W20	J12	125	6
16570-ZE3-W30	J15	128	31
16570-ZE3-W40	J12	125	7
16570-ZK3-720	J15	128	31
16570-ZK3-870	J15	128	31
16570-ZK3-D20	J12	125	9
16570-ZK3-D21	J12	125	9
16571-ZE3-W00	J12	125	10
16571-ZE3-W10	J12	125	10
16574-ZE1-000	J13	126	11
16575-ZE2-W00	J13	126	12
16576-891-000	G10	75	19
	J13	126	13
16578-ZE1-000	J14	127	14
16580-Z5T-000	J14	127	15
16581-ZE3-W00	J14	127	15
16584-883-300	J14	127	16
16590-ZE2-812	G10	75	20
16592-883-310	J14	127	17
16594-883-010	G10	75	21
	J14	127	18
16599-ZG1-M10	J14	127	19
16610-ZE1-000	G10	75	22
16611-ZE2-711	H2	83	28
	L2	147	9
16611-ZE3-D21	H2	83	28
16613-893-000	H2	83	29
	L2	147	10
16615-893-000	H2	83	30
	L2	147	11
16615-ZE2-810	G10	75	23
16731-ZE2-003	G3	68	1
16854-ZH8-000	I4	101	1
	L7	152	2
16910-GB2-005	I4	101	2
16910-ZE8-015	I4	101	2
	L7	152	3
16950-ZB4-015	I12	109	2
	L7	152	4
16952-ZB4-005	I12	109	3
	L7	152	5
16953-ZE1-812	G10	75	24
16954-ZE1-812	G10	75	25
16955-ZE1-000	I4	101	3
16955-ZE1-010	I4	101	3
16956-ZE1-811	G10	75	26
16957-ZE1-812	G11	76	27
16958-397-771	I12	109	4
	L7	152	6
16959-471-831	I12	109	5
	L7	152	7
16959-Z5T-901	G13	78	40
16967-GA6-671	I12	109	6
	L7	152	8
16967-ZE0-811	G11	76	28
17000			
17210-ZE3-010	H5	86	2
	H9	90	2
	H12	93	1
17211-899-000	H10	91	1
	L3	148	2
	L14	159	2
17212-Z5R-000	H10	91	2
	L3	148	3
17212-ZB4-003	H10	91	2
	L3	148	3
17218-ZE3-000	H5	86	3
	H9	90	3
	H12	93	2
17219-ZE3-840	H9	90	4
17220-Z23-S30	L14	159	3
17220-Z5R-000	H11	92	12
	L4	149	13
17220-ZB4-003	H10	91	3
	L3	148	4
17222-Z23-H60	L14	159	4
17222-ZC2-000	H10	91	4
	L3	148	5
17223-Z23-000	L14	159	5
17223-Z23-S30	L14	159	6
17228-Z5T-000	H2	83	26
17229-Z23-H60	L14	159	7
17230-ZE3-841	H9	90	5
17231-899-000	H10	91	5
	L3	148	6
17231-Z23-H60	L14	159	8
17231-Z5T-000	H12	93	3
17231-ZE3-W01	H6	87	4
17232-891-000	H6	87	5
	H9	90	6
	H12	93	4
17232-898-000	H11	92	13
	L4	149	14
17233-896-701	M1	162	1
17233-Z23-H60	L14	159	9
17235-899-000	H10	91	6
	L3	148	7
17235-Z5R-800	H8	89	14
17235-Z5T-000	H12	93	5
17235-ZH9-N00	H6	87	6
17235-ZH9-N01	H6	87	6
17236-899-000	H10	91	7
	L3	148	8
17238-ZE2-310	H6	87	7
	H9	90	7
	H12	93	6
17238-ZE7-710	L14	159	10
17239-ZE1-000	H6	87	8
	H12	93	7
17239-ZE3-840	H9	90	8
17252-899-000	H10	91	8
	L3	148	9
17316-611-000	E2	35	9
17367-413-690	H11	92	9
	L3	148	10
17410-Z5T-000	H12	93	8
17410-ZE3-840	H9	90	9
17410-ZH9-N00	H7	88	9
17417-Z5T-000	H12	93	9
17470-ZE3-842	H9	90	10
17475-ZE3-841	H9	90	11
17476-ZE3-841	H9	90	12
17500-ZE3-812ZA	I4	101	4
17500-ZE3-812ZE	I4	101	4
17500-ZE3-813ZA	I4	101	4
17500-ZE3-813ZE	I4	101	4
17505-ZB2-003	I12	109	7
	L7	152	9
17505-ZE2-013	I4	101	5
17510-Z5T-000ZA	I6	103	6
17510-Z5T-000ZB	I6	103	6
17510-ZB4-000ZA	L7	152	10
17510-ZB4-000ZC	L7	152	10
17510-ZB4-000ZE	L7	152	10
17510-ZB4-000ZF	L7	152	10
17510-ZB4-000ZH	L7	152	10
17510-ZB4-000ZJ	L7	152	10
17510-ZC2-000ZJ	I12	109	8
17510-ZE3-020ZA	I5	102	6
17510-ZE3-020ZB	I5	102	6
17510-ZE3-020ZD	I5	102	6
17510-ZE3-020ZE	I5	102	6
17510-ZE3-800ZA	I5	102	6
17510-ZE3-800ZB	I6	103	6
17510-ZE3-800ZC	I5	102	6
17510-ZE3-800ZE	I5	102	6
17510-ZE3-801ZA	I5	102	6
	I6	103	6
17510-ZE3-801ZB	I6	103	6
17510-ZE3-801ZC	I5	102	6
	I6	103	6
17510-ZE3-801ZE	I6	103	6
17510-ZK6-880ZA	I5	102	6
17510-ZK6-880ZB	I5	102	6
17510-ZK6-880ZC	I5	102	6
17510-ZK6-881ZA	I6	103	6
17510-ZK6-881ZB	I6	103	6
17510-ZK6-881ZC	I6	103	6
17532-ZK6-880	I10	107	22
17532-ZK6-881	I10	107	22
17534-ZK6-880	I10	107	23
17534-ZK6-881	I10	107	23
17536-ZK6-880	I10	107	24
17620-899-013	I12	109	9
	L7	152	11
17620-Z0T-305	I6	103	7
17620-Z4H-010	I11	108	28
17620-Z4H-020	I10	107	28
	I11	108	28
17631-899-000	I12	109	10
	L7	152	12
17631-Z0T-801	I6	103	8
	I7	104	8
17631-Z0T-812	I6	103	8
17631-Z4H-800	I6	103	8
17670-899-000	L7	152	13
17672-880-000	I7	104	10
17672-899-000	I12	109	11
17672-Z4H-000	I11	108	29
17672-ZE2-W01	I7	104	9
17673-893-000	I7	104	11
17701-Z5S-U31	I7	104	12
	L7	152	14
17701-Z5S-U32	I7	104	12
	L7	152	14
17701-ZK6-U30	I7	104	12
	L7	152	14
17850-ZD1-E30	J16	129	2
18000			
18205-Z5T-000	I3	100	1
18301-ZE2-V60	K15	144	2
18310-Z5T-000	I3	100	2
18310-ZB8-003	L13	158	1
18310-ZD1-E31	L5	150	1
18310-ZD1-E32	L5	150	1
18310-ZE2-V60	L5	150	1
18310-ZE2-V61	L5	150	1
18310-ZE2-W61	H13	94	1
	L5	150	2
18310-ZE3-003	I1	98	1
18310-ZK6-880	H13	94	1
18320-Z5T-000	I3	100	3
18320-ZC2-000	I2	99	1
	L5	150	3
18320-ZE2-W61	H13	94	2
18320-ZE2-W62	H13	94	2
18320-ZE3-H00	I1	98	2
18320-ZF6-W01	H13	94	2
18323-ZE3-W40	H13	94	3
18325-ZB4-000	I2	99	2
	L5	150	4
18325-ZE3-H00	I1	98	3
18329-ZB4-000	I2	99	3
	L5	150	5
18330-ZB8-003	L13	158	2
18330-ZE2-000	I1	98	4
18330-ZE2-W00	H14	95	4
18330-ZE3-700	I2	99	4
18330-ZE3-710	I2	99	4
18331-Z5T-000	I3	100	4
18331-ZE3-810	H14	95	5
	I1	98	5
	L5	150	6
18331-ZE3-811	H14	95	5
	I1	98	5
	I3	100	5
	L5	150	6
18333-ZB4-800	I2	99	5
	L5	150	7
18333-ZB4-801	L5	150	7
18333-ZB7-800	L13	158	3
18333-ZE3-800	I2	99	6
	L5	150	8
18333-ZF6-W01	H14	95	6
	I1	98	6
	I2	99	14
	I3	100	6
	L5	150	9
18333-ZK6-Y00	H16	97	18
18336-ZE3-000	I1	98	7
	I3	100	7
18338-ZE2-V60	L5	150	10
18350-Z5T-800	I3	100	8
18355-ZB4-630	I2	99	12
	L5	150	11
18355-ZE2-W00	H14	95	7
	L5	150	12
18355-ZE3-010	I1	98	8
18361-ZL0-000	L6	151	20
18381-Z8S-801	H14	95	8
18381-ZE2-800	H15	96	9
	I1	98	9
18381-ZE2-801	I3	100	9
18381-ZE2-W10	H14	95	8
	H15	96	8
	I3	100	10
	L5	150	13
18430-ZF6-W50	H15	96	10
	I1	98	10
18433-ZF6-W40	M1	162	2
18434-ZF6-W40	M1	162	3
18436-ZH8-W40	M1	162	4
18437-ZF6-W40	M2	163	5
18438-ZF6-W40	M2	163	6
18466-ZH8-W40	M2	163	7
19000			
19511-ZE3-000	I14	111	1
19511-ZK6-880	I14	111	1
19512-ZE2-000	I14	111	2
19610-Z5T-000ZA	G4	69	2
19610-Z5T-000ZB	G4	69	2
19610-Z5T-800	G4	69	2
19610-ZE3-010ZB	G3	68	2
19610-ZE3-010ZC	G4	69	2
19610-ZE3-010ZG	G3	68	2
19610-ZE3-010ZH	G4	69	2
19610-ZE3-010ZL	G3	68	2
19610-ZE3-700ZB	G3	68	2
19610-ZE3-700ZF	G3	68	2
19610-ZE3-700ZG	G3	68	2
19610-ZE3-700ZJ	G3	68	2
19610-ZE3-700ZK	G3	68	2
19610-ZE3-700ZL	G4	69	2
19610-ZE3-W02ZB	G4	69	2

PART NO. INDEX

Part Number	Address	Page	Ref.
19610-ZE3-W02ZD	G4	69	2
19610-ZE3-W02ZE	G4	69	2
19610-ZE3-W02ZF	G4	69	2
19620-ZE3-811	G4	69	3
19631-Z5T-000	G4	69	4
19631-ZE3-W00	G4	69	4
22000			
22103-ZE3-610	K8	137	3
22103-ZE3-640	K9	138	3
23000			
23220-ZE3-610	K8	137	4
23220-ZE3-640	K9	138	4
23710-ZE3-610	K8	137	5
23710-ZE3-640	K9	138	5
23710-ZF6-U50	K9	138	5
28000			
28400-Z5T-003ZA	F13	62	1
28400-Z5T-003ZB	F13	62	1
28400-ZE3-W01ZB	F13	62	1
28400-ZE3-W01ZC	F13	62	1
28400-ZE3-W01ZD	F13	62	1
28400-ZE3-W01ZH	F13	62	1
28400-ZE3-W01ZK	F13	62	1
28400-ZE3-W01ZL	F13	62	1
28400-ZE3-W01ZN	F13	62	1
28400-ZE3-W01ZP	F13	62	1
28400-ZE3-W02ZB	F13	62	1
	L15	160	1
28400-ZE3-W02ZP	F13	62	1
28410-ZE3-W01ZB	F14	63	2
	L15	160	2
28410-ZE3-W01ZD	F14	63	2
28410-ZE3-W01ZE	F14	63	2
28410-ZE3-W01ZH	F14	63	2
28410-ZE3-W01ZK	F14	63	2
28410-ZE3-W01ZL	F14	63	2
28410-ZE3-W01ZN	F14	63	2
28410-ZE3-W01ZP	F14	63	2
28421-ZE3-W01	F14	63	3
	L15	160	3
28422-ZE2-W01	F14	63	4
	L15	160	4
28441-ZE2-W01	F15	64	5
	L15	160	5
28442-ZE2-W01	F15	64	6
	L15	160	6
28443-ZE2-W01	F16	65	7
	L15	160	7
28444-ZE2-W01	F16	65	8
	L15	160	8
28450-ZE3-W11	I14	111	3
28451-ZE3-W01	I14	111	4
28461-Z5T-003	G2	67	13
28461-ZE2-W02	F16	65	9
28461-ZE2-W03	F16	65	9
	L15	160	9
28462-ZE3-W01	F16	65	10
	L15	160	10
28463-Z5T-003	G2	67	14
30000			
30500-Z5R-003	J6	119	1
30500-ZF6-W02	J1	114	1
	J5	118	1
30500-ZF6-W03	J1	114	1
	J5	118	1
30561-ZB4-000	K15	144	3
30700-ZE1-013	J2	115	2
	J5	118	2
	J6	119	2
30700-ZF5-013	J2	115	3
31000			
31100-ZE3-701	I15	112	7
31100-ZE3-712	I15	112	8
31100-ZE3-722	I15	112	9
31100-ZE3-U10	I15	112	5
31100-ZE3-W01	I15	112	6
31100-ZE3-W21	I15	112	6
31110-Z5T-000	I15	112	7
31110-Z5T-820	I15	112	9
31110-Z5T-840	I15	112	6
31161-ZE2-000	E8	41	17
31204-ZA0-003	J7	120	1
31206-ZE3-003	J7	120	2
31207-ZE3-003	J7	120	3
31210-ZE3-013	J7	120	4
31210-ZE3-023	J7	120	4
	J8	121	4
31211-ZE2-003	J8	121	5
31212-ZE3-003	J8	121	6
31213-ZE2-003	J8	121	7
31215-ZE2-003	J8	121	8
31218-ZE3-003	J8	121	9
31219-ZE2-003	J8	121	10
31222-ZE3-791	J9	122	11
31231-ZE2-003	J9	122	12
31232-ZE3-003	J9	122	13
31233-ZE2-003	J9	122	14
31510-ZE1-811	J2	115	4
	J6	119	3
31510-ZE3-003	J2	115	4
	J6	119	3
31511-ZE2-W00	J5	118	3
31511-ZE3-000	J2	115	5
	J6	119	4
31512-ZE2-000	J2	115	6
	J5	118	4
	J6	119	5
31600-ZE2-861	K5	134	1
	K15	144	4
31610-Z5R-821ZA	K5	134	2
31610-Z5R-821ZB	K5	134	2
31610-Z5S-801ZA	K1	130	1
31610-Z5S-801ZB	K1	130	1
31610-Z5S-801ZC	K1	130	1
31610-Z5S-802ZA	K1	130	1
	K2	131	1
31610-Z5S-802ZB	K1	130	1
	K2	131	1
31610-Z5S-821ZA	K5	134	2
31610-Z5S-821ZB	K5	134	2
31610-Z5T-801ZA	K1	130	1
31610-Z5T-801ZB	K1	130	1
31610-Z5T-801ZC	K1	130	1
31610-Z5T-801ZD	K1	130	1
31610-Z5T-802ZA	K1	130	1
	K2	131	1
31610-Z5T-802ZB	K1	130	1
31610-Z5T-802ZC	K1	130	1
	K2	131	1
31610-Z5T-811ZA	K2	131	1
31610-Z5T-811ZB	K2	131	1
31610-Z5T-831ZA	K5	134	2
31610-Z5T-831ZB	K5	134	2
31610-ZE3-W33ZA	K5	134	2
31610-ZE3-W33ZD	K5	134	2
31610-ZE3-W42ZA	K5	134	2
31610-ZE3-W42ZD	K5	134	2
31612-ZE2-003	K2	131	2
	K5	134	3
31614-ZE2-003	K2	131	3
	K6	135	4
31615-ZE3-003ZA	K2	131	4
	K6	135	5
31615-ZE3-003ZC	K2	131	4
31615-ZE3-003ZD	K2	131	4
31615-ZE3-003ZE	K2	131	4
	K6	135	5
31620-ZG5-013	K6	135	6
31620-ZG5-023	K6	135	6
31620-ZG5-033	K6	135	6
31630-ZE1-003	J2	115	7
31630-ZE1-013	J2	115	7
	J6	119	6
31630-ZE2-841	J2	115	7
31630-ZE2-842	J2	115	7
31630-ZE2-861	J2	115	8
	J6	119	7
31630-ZE2-W01	J5	118	5
31630-ZF5-801	J2	115	7
	J6	119	6
31700-124-008	K2	131	5
	K15	144	5
31710-ZS9-A01	L1	146	44
31710-ZS9-A02	L1	146	44
32000			
32110-Z5T-000	J6	119	8
32110-Z5T-810	J6	119	8
32110-ZE2-860	K6	135	8
	K15	144	6
32110-ZE2-W00	K6	135	7
32127-738-700	K2	131	6
	K15	144	7
32130-ZE1-000	K15	144	8
32197-ZE1-003	K2	131	7
	K6	135	9
32197-ZH8-003	G4	69	5
	K15	144	9
32343-892-003	K15	144	10
32902-892-003	K2	131	8
	K6	135	10
34000			
34150-ZH7-003	E6	39	4
	K2	131	9
	K6	135	11
34150-ZH7-013	E6	39	4
	K2	131	9
	K6	135	11
35000			
35100-Z5T-811	K3	132	10
35100-Z5T-831	K6	135	12
35100-ZB4-013	K15	144	11
35100-ZB4-023	K15	144	11
35100-ZE2-023	K2	131	10
	K15	144	12
35100-ZE2-033	K2	131	10
	K3	132	10
	K16	145	12
35100-ZE2-842	K2	131	10
	K15	144	12
	K16	145	12
35100-ZE2-843	K3	132	10
	K16	145	12
35100-ZE2-862	K6	135	12
35100-ZE2-W01	K6	135	12
35111-880-013	K3	132	11
	K6	135	13
	K16	145	13
35120-Z0D-V81	G4	69	6
	K16	145	14
35120-Z5T-003	G4	69	12
35480-ZF6-003	E6	39	2
36000			
36100-ZF6-P81	G4	69	7
36100-ZF6-P82	G4	69	7
36101-ZE2-701	J3	116	9
	J5	118	6
36101-ZE3-800	J2	115	9
36103-ZE1-000	J3	116	10
	J5	118	7
	J6	119	9
	K16	145	15
36106-892-003	K16	145	16
36110-ZB4-701	K16	145	17
36110-ZB4-702	K16	145	17
36135-ZF6-D41	H2	83	31
36160-ZB4-003	J16	129	3
36160-ZB4-013	J16	129	3
36170-ZB4-003	K16	145	18
36170-ZB4-013	K16	145	18
38000			
38220-ZE1-000	K16	145	19
38220-ZE2-R70	K16	145	19
38240-VA3-900	K3	132	12
	K16	145	20
38240-ZE2-840	K3	132	12
	K16	145	20
38250-898-000	K16	145	21
38250-ZA8-701	K3	132	13
38251-898-000	K16	145	22
38252-898-000	K16	145	23
38253-898-000	K16	145	24
38254-898-000	K16	145	25
50000			
50319-ZB2-000	I12	109	12
	L7	152	15
53000			
53149-964-003	H2	83	32
	L2	147	12
68000			
68325-899-000	L1	146	46
68325-ZC2-000	L1	146	45
76000			
76122-952-000	L1	146	47
81000			
81329-567-020	G4	69	8
87000			
87516-ZH7-000	K10	139	1
	K11	140	1
	K12	141	9
	L9	154	1
87516-ZH7-010	K10	139	1

Part Number	Address	Page	Ref.
87516-ZH7-010	K11	140	1
	K12	141	9
	K13	142	9
	L10	155	15
87516-ZH7-800	L9	154	1
87516-ZH7-801	L10	155	15
87516-ZH7-810	K10	139	1
	K12	141	9
87519-ZH7-000	K10	139	1
	K12	141	9
	K13	142	9
	L11	156	16
87521-Z5T-000	K12	141	2
87521-ZF6-W03	K11	140	2
87521-ZF6-W04	K11	140	2
	K12	141	2
	L10	155	14
87522-883-660	L9	154	2
87528-898-620	L10	155	13
87528-Z5T-000	K12	141	8
87528-ZH7-000	K12	141	8
	L9	154	3
87529-Z4S-820	K6	135	14
87529-Z4T-840	K3	132	14
87529-ZE2-812	L9	154	4
87529-ZE2-861	K6	135	14
87532-ZH7-000	K12	141	3
	L10	155	5
87533-ZC0-630	L10	155	6
87534-ZE1-841	K12	141	4
	L10	155	7
87535-ZE1-841	K12	141	5
87539-898-620	L10	155	8
87539-Z0J-000	K13	142	10
	L11	156	17
87539-Z0J-800	L12	157	18
87539-Z0J-810	L11	156	17
87565-ZB4-A00	L10	155	9
87565-ZE2-810	K12	141	6
87565-ZE2-A01	K12	141	6
87594-ZB4-A00	K12	141	7
	L10	155	12
88000			
88911-MJ3-000	H2	83	33
89000			
89216-ZB4-000	K14	143	1
	L10	155	10
89218-ZE1-000	K14	143	2
	L10	155	11
89219-805-000	K14	143	3
90000			
90001-ZE8-000	F10	59	5
90002-ZE2-U91	I2	99	13

Part Number	Address	Page	Ref.
	L5	150	14
90003-ZE3-600	K16	145	26
90004-Z5T-000	G4	69	13
90004-ZE2-W01	G1	66	11
	L15	160	11
90005-ZM3-000	L14	159	11
90006-ZE2-000	H15	96	11
	I3	100	11
90007-ZE2-003	J10	123	15
90008-ZE2-003	G1	66	12
	G4	69	9
	I10	107	25
	L15	160	12
90009-ZE2-003	H7	88	10
	H9	90	13
	H12	93	10
90012-888-000	J3	116	11
	J4	117	13
	J5	118	8
	J6	119	10
90012-KM9-000	E2	35	10
90012-ZE0-010	F12	61	16
90013-883-000	E7	40	5
	G4	69	10
	H15	96	12
	I3	100	12
	J3	116	12
	J5	118	9
	J6	119	11
	J14	127	20
	J16	129	4
	K3	132	15
	K6	135	15
	K16	145	27
90014-ZE2-000	E2	35	11
90014-ZE6-000	J4	117	13
	J6	119	12
90015-883-000	J4	117	14
	J5	118	10
	J6	119	13
90015-ZE5-010	J14	127	21
90016-ZG9-N30	J14	127	22
90018-ZK6-P10	E2	35	10
90042-ZE3-700	E2	35	12
90042-ZE8-000	E2	35	12
90042-ZK6-D70	E2	35	12
90047-ZE3-791	E2	35	10
90050-ZE1-000	H16	97	13
			14
			16
	I1	98	11
			12
			14
	I3	100	13
	K16	145	28
	L6	151	15
	M2	163	8
90050-ZE3-H00	I1	98	11
90050-ZH8-W40	M2	163	9

Part Number	Address	Page	Ref.
90055-ZE1-000	H16	97	14
			15
			16
	I1	98	13
			14
	I3	100	14
	L6	151	16
90056-ZL0-000	L6	151	15
90101-692-000	K16	145	29
90107-959-003	F1	50	9
90110-ZE2-003	J10	123	16
90114-SA0-000	J14	127	23
90131-883-000	E7	40	6
90131-ZE3-790	K16	145	30
90142-MB0-000	H9	90	14
90201-ZE3-790	I15	112	10
	I16	113	10
90201-ZE3-V00	I16	113	10
90202-Z2E-000	H12	93	11
90203-ZA0-800	H7	88	11
90206-ZE1-000	F12	61	17
90302-KF9-900	M2	163	10
90325-044-000	H8	89	12
	H9	90	15
	H12	93	12
90380-MA6-010	K4	133	16
	K6	135	16
90413-ZK6-880	F12	61	20
90431-ZE2-700	H2	83	34
	L2	147	13
90432-ZE2-700	H2	83	35
	L2	147	14
90433-ZE2-700	H2	83	36
90434-ZE2-700	H3	84	37
90441-ZE2-010	E2	35	13
90446-KE1-000	E7	40	7
90471-ZE3-000	K16	145	31
90473-842-000	F1	50	10
90473-ZE3-010	F1	50	10
90503-898-000	I12	109	13
	L7	152	16
90534-706-010	F1	50	11
90601-ZE3-000	F10	59	6
90602-ZE1-000	E12	45	13
	E15	48	11
90605-230-000	G11	76	29
	J14	127	24
90630-751-000	J6	119	14
	K4	133	17
	K6	135	17
90634-ZL8-H00	H8	89	15
	H11	92	14
	L4	149	15
90650-SD9-003	H3	84	38
	K16	145	32
90654-SA4-003	G4	69	11
90672-SA0-003	K4	133	18
	K6	135	18
90684-ZA0-601	J4	117	15

Part Number	Address	Page	Ref.
	J6	119	15
	K16	145	33
90701-HC4-000	E12	45	14
	E15	48	12
90741-805-000	F2	51	12
	K8	137	6
90741-889-810	F2	51	12
	K8	137	6
90741-ZE2-000	I16	113	11
90745-ZE2-600	F2	51	12
	K9	138	6
90801-ZE2-003	E7	40	8
90802-Z6L-000	L14	159	12
90851-898-000	I12	109	14
	L8	153	17
90854-ZB2-000	I12	109	15
	L8	153	18
90854-ZB3-000	I7	104	13
	L14	159	13
91000			
91001-ZF6-003	F2	51	13
91001-ZF6-013	F2	51	13
91006-MT3-003	K9	138	7
91009-KJ1-003	E15	48	13
	K8	137	7
91102-GE0-003	E15	48	17
91201-890-003	K8	137	8
	K9	138	8
91201-Z1C-003	E7	40	9
91201-ZE3-004	E7	40	9
	E13	46	15
91203-952-771	E7	40	10
91353-671-004	E7	40	11
	I8	105	14
91406-ZB4-000	K16	145	34
91406-ZE2-003	K4	133	19
	K6	135	19
91424-Z4G-821	I8	105	17
91424-Z4G-822	I8	105	17
91424-Z4J-801	I12	109	18
91424-Z4J-802	I12	109	18
	I13	110	18
	L8	153	21
91424-Z4J-811	I8	105	17
91424-Z4J-812	I8	105	17
91424-Z4J-821	I9	106	18
91424-Z4J-822	I9	106	18
91424-Z4K-801	I8	105	17
91424-Z4K-802	I8	105	17
91424-Z5F-811	L8	153	21
91424-Z5F-812	L8	153	21
91424-Z5L-801	I9	106	18
	L8	153	21
91424-Z5L-802	I8	105	18
	I9	106	18
	L8	153	21
91424-Z5L-811	I8	105	17

Part Number	Address	Page	Ref.
	I12	109	18
91424-Z5L-812	I8	105	17
	I13	110	18
	L8	153	21
91424-Z5L-821	I8	105	18
91424-Z5L-822	I8	105	18
91424-Z5R-801	L8	153	21
91424-Z5R-802	L8	153	21
91424-Z5S-801	I8	105	17
91424-Z5S-802	I8	105	17
91424-Z5T-003	I9	106	18
91424-ZBG-V41	L8	153	21
91551-898-000	I12	109	16
	L8	153	19
91601-ZE2-003	J10	123	17
92000			
92101-08025-0A	F1	50	9
92101-08028-0A	L13	158	4
92800-12000	K16	145	35
92900-08032-0E	E2	35	10
93000			
93500-03006-1H	G12	77	30
93500-03012-0H	K4	133	20
	K16	145	36
93500-04006-0H	G12	77	31
	J14	127	25
93500-04012-0H	K4	133	21
	K6	135	20
93500-05008-0A	J16	129	5
93500-05012-0A	H3	84	39
93500-05016-0A	J15	128	26
93500-05032-0A	J15	128	27
93500-05035-0A	J15	128	28
93500-05045-0A	J15	128	29
93600-05010-0A	I8	105	15
	I12	109	17
	L8	153	20
93891-05012-00	M2	163	11
93891-06020-07	M2	163	12
93892-05012-18	H3	84	40
93892-05032-18	J10	123	18
93893-05016-00	G12	77	32
94000			
94001-04390-0S	K4	133	22
	K6	135	21
94050-05000	H11	92	10
	L3	148	11
94050-06000	H3	84	41
	H8	89	13
	H9	90	16
	H11	92	11
	H12	93	13
	J15	128	30

PART NO. INDEX

Part Number	Address	Page	Ref.
94050-06000	L3	148	12
94050-08000	H16	97	17
	I1	98	15
	I2	99	7
	I3	100	15
	I8	105	16
	L6	151	17
	L13	158	5
94050-10000	E8	41	12
94070-06080	J10	123	19
94101-04800	K4	133	23
	K7	136	22
94101-06800	E13	46	16
	E15	48	14
94103-05000	H3	84	42
	L2	147	15
94103-05700	M2	163	13
94103-08000	I2	99	8
94109-12000	E8	41	13
	K16	145	37
94111-04800	K4	133	24
	K7	136	23
94111-05000	M3	164	14
94251-10000	E8	41	14
94301-08140	K8	137	9
	K9	138	9
94301-12200	E2	35	14
94305-20122	G12	77	33
94540-02010	H3	84	43
94540-04010	H3	84	44
	L2	147	16
94540-07010	H3	84	45
	L2	147	17
95000			
95001-35025-40	G12	77	34
95001-45150-40	I12	109	18
95001-45165-40	I12	109	18
95001-45180-40	I8	105	17
95001-45190-40	L8	153	21
95001-45235-40	I8	105	18
	L8	153	21
95001-45250-40	I8	105	17
95001-45260-40	L8	153	21
95001-45300-40	H4	85	46
95001-45400-40	I8	105	17
95001-45430-40	I8	105	18
95002-02070	H4	85	47
95002-02080	H4	85	48
	I10	107	19
	I13	110	19
	L8	153	22
95002-40800-08	I10	107	26
	I13	110	21
	L8	153	26
95002-41050-08	I10	107	27
	L8	153	25
95002-70000	I10	107	20
	L8	153	23
95005-11105-30	E2	35	7
95005-35075-10	H4	85	49
95005-35130-10	H4	85	50
95701-06010-00	I2	99	9
	K16	145	38
	L6	151	18
			21
95701-06012-00	E8	41	15
	L6	151	18
			21
95701-06020-00	K16	145	39
95701-06022-00	I13	110	20
	L8	153	24
95701-06032-08	L14	159	14
95701-08016-08	I2	99	10
95701-08020-00	I2	99	11
	K16	145	40
	L6	151	19
95701-08025-00	F1	50	9
	I10	107	21
95701-08035-08	J10	123	20
95701-08040-00	E14	47	17
	E15	48	15
	K8	137	10
	K9	138	10
95701-08070-00	K16	145	41
95701-10080-00	E2	35	15
	E3	36	15
95725-10080-00	E3	36	15
95801-08020-18	K16	145	42
96000			
96100-62020-00	E8	41	16
	E14	47	18
	E15	48	16
96100-62040-00	E15	48	17
96100-62060-00	K8	137	11
96100-62070-00	E14	47	19
	E15	48	18
96100-63020-00	K9	138	11
96205-04005	G12	77	35
98000			
98079-55841	E4	37	16
98079-55846	E4	37	16
	L1	146	48
98079-55855	E4	37	16
98079-56846	E4	37	16
98079-56855	E4	37	16
98200-30500	K4	133	25
	L1	146	43
98200-31000	K16	145	43
98200-31500	K4	133	25
	K7	136	24
	L1	146	43
98200-32500	K7	136	24
99000			
99101-ZH8-0880	G12	77	36
99101-ZH8-0900	G12	77	36
99101-ZH8-0920	G12	77	36
99101-ZH8-0950	G12	77	36
	G13	78	36
99101-ZH8-0980	G12	77	36
	G13	78	36
	H4	85	51
99101-ZH8-1000	G12	77	36
	H4	85	51
99101-ZH8-1020	G13	78	36
	H4	85	51
99101-ZH8-1050	G13	78	36
	H4	85	51
99101-ZH8-1080	H4	85	51
99101-ZH8-1100	G13	78	36
99101-ZH8-1120	G13	78	36
99101-ZH8-1150	G13	78	36
99204-ZA0-0400	G13	78	37
99204-ZA0-0450	G13	78	37
	H4	85	52
99204-ZE0-0380	G13	78	37
99204-ZE0-0450	G13	78	37
99204-ZE2-0400	G13	78	37

PART NAME INDEX

Part name	Address	Page	Ref.
[A]			
ALERT UNIT, OIL	E6	39	4
	K2	131	9
	K6	135	11
ARMATURE COMP.	J7	120	2
ARM COMP., GOVERNOR	J11	124	1
ARM, GOVERNOR	J11	124	2
ARM, VALVE ROCKER	F11	60	4
ARRESTER COMP., SPARK	I3	100	8
ARRESTER, SPARK	H14	95	7
	I1	98	8
	I2	99	12
	L5	150	11
			12
[B]			
BAND	K2	131	8
	K6	135	10
BARREL ASSY., CYLINDER	E5	38	1
BASE COMP., AIR CLEANER	L14	159	6
BASE COMP., CONTROL	J14	127	15
BASE COMP., MUFFLER COVER	M1	162	4
BEARING, RADIAL BALL, 6202	E8	41	16
	E14	47	18
	E15	48	13
			16
	K8	137	7
BEARING, RADIAL BALL, 6204	E15	48	17
BEARING, RADIAL BALL, 6206	K8	137	11
	K9	138	7
BEARING, RADIAL BALL, 6207	E14	47	19
	E15	48	18
BEARING, RADIAL BALL, 6207S	F2	51	13
BEARING, RADIAL BALL, 6207SH	F2	51	13
BEARING, RADIAL BALL, 6302	K9	138	11
BOLT-WASHER, 5X14	J10	123	15
BOLT-WASHER, 6X22	H7	88	10
	H9	90	13
	H12	93	10
BOLT, CONNECTING ROD	F10	59	5
BOLT, DRAIN PLUG, 12MM	K16	145	35
BOLT, DRAIN PLUG, 12X15	E7	40	6
BOLT, FLANGE, 10X80	E2	35	15
	E3	36	15
BOLT, FLANGE, 5X18	L14	159	11
BOLT, FLANGE, 6X10	G1	66	12
	G4	69	9
	I2	99	9
	I10	107	25
	K16	145	38
	L6	151	18
			21
	L15	160	12
BOLT, FLANGE, 6X12	E7	40	5
	E8	41	15
	G4	69	10
	H15	96	12
BOLT, FLANGE, 6X12	I3	100	12
	J3	116	12
	J5	118	9
	J6	119	11
	J14	127	20
	J16	129	4
	K3	132	15
	K6	135	15
	K16	145	27
	L6	151	18
			21
BOLT, FLANGE, 6X20	K16	145	39
BOLT, FLANGE, 6X22	I13	110	20
	L8	153	24
BOLT, FLANGE, 6X28	J4	117	14
	J5	118	10
	J6	119	13
BOLT, FLANGE, 6X32	L14	159	14
BOLT, FLANGE, 6X35	J4	117	13
	J6	119	12
BOLT, FLANGE, 6X40	J3	116	11
	J4	117	13
	J5	118	8
	J6	119	10
BOLT, FLANGE, 8X16	I2	99	10
BOLT, FLANGE, 8X20	I2	99	11
	K16	145	40
			42
	L6	151	19
BOLT, FLANGE, 8X25	F1	50	9
	I10	107	21
BOLT, FLANGE, 8X35	J10	123	20
BOLT, FLANGE, 8X40	E14	47	17
	E15	48	15
	K8	137	10
	K9	138	10
BOLT, FLANGE, 8X70	K16	145	41
BOLT, GOVERNOR ARM	J14	127	21
BOLT, HEAD COVER	E2	35	11
BOLT, HEX., 3/8-24UNF	K16	145	26
BOLT, HEX., 8X25	F1	50	9
BOLT, HEX., 8X28	L13	158	4
BOLT, PIVOT, 8MM	F12	61	16
BOLT, STUD, 8X106	E2	35	12
BOLT, STUD, 8X115	E2	35	12
BOLT, STUD, 8X131.5	E2	35	12
BOLT, STUD, 8X22	E2	35	10
BOLT, STUD, 8X32	E2	35	10
BOLT, STUD, 8X34	E2	35	10
BOLT, STUD, 8X40	E2	35	10
BOX ASSY., CONTROL	K1	130	1
	K2	131	1
	K5	134	2
BRACKET, CASE MOUNTING	K2	131	3
	K6	135	4
BRACKET, CENTER	J8	121	5
BRACKET, FR.	J8	121	6
BRUSH	J8	121	8
BUSH, ARM PIVOT	H2	83	32
BUSH, ARM PIVOT	L2	147	12
BUSH, CONTROL KNOB	K16	145	16
[C]			
CAMSHAFT ASSY.	F11	60	2
CAP ASSY., NOISE SUPPRESSOR	J2	115	2
			3
	J5	118	2
	J6	119	2
CAP ASSY., OIL FILLER	E10	43	3
			4
			5
			6
	E15	48	3
			4
CAP COMP., FUEL FILLER	I6	103	7
	I10	107	28
	I11	108	28
	I12	109	9
	L7	152	11
CAP, CHOKE DUST	G16	81	10
CAP, LENS	K16	145	23
CAP, MUFFLER	H14	95	5
	I1	98	5
	I3	100	5
	L5	150	6
CAP, PRE AIR CLEANER	H9	90	11
CAP, SEALING	H8	89	15
	H11	92	14
	L4	149	15
	L14	159	12
CARBURETOR ASSY.	G7	72	9
	G15	80	8
	G16	81	8
CASE COMP., AIR CLEANER	H10	91	3
	H11	92	12
	L3	148	4
	L4	149	13
	L14	159	3
CASE COMP., FUSE	K16	145	19
CASE COMP., PRE AIR CLEANER	H9	90	10
CASE COMP., RECOIL STARTER	F14	63	2
	L15	160	2
CASE, CONTROL	K2	131	2
	K5	134	3
CHAMBER SET, FLOAT	G6	71	4
	G14	79	4
CHOKE SET	G7	72	8
CIRCLIP, 5MM	G11	76	29
	J14	127	24
CLAMPER, CORD	J2	115	5
	J5	118	3
	J6	119	4
CLAMP, TUBE	I10	107	26
			27
	I13	110	21
	L8	153	25
			26

PART NAME INDEX

Part name	Address	Page	Ref.
CLIP A, AIR CLEANER WIRE	H10	91	6
	L3	148	7
CLIP B, AIR CLEANER WIRE	H10	91	7
	L3	148	8
CLIP, BREATHER TUBE	E2	35	9
CLIP, GOVERNOR HOLDER	E12	45	13
	E15	48	11
CLIP, HARNESS	J4	117	15
	J6	119	15
	K16	145	33
CLIP, PISTON PIN, 20MM	F10	59	6
CLIP, PURSE LOCK	J6	119	14
	K4	133	17
	K6	135	17
CLIP, TUBE	G3	68	1
	H4	85	47
			48
	I10	107	19
			20
	I13	110	19
	L8	153	22
			23
CLIP, VALVE GUIDE	E1	34	4
CLIP, WIRE	K15	144	3
CLIP, WIRE HARNESS	H3	84	38
	K16	145	32
CLIP, WIRE HARNESS, 6MM	G4	69	11
CLUTCH COMP., OVERRUNNING	J7	120	3
COCK ASSY., FUEL	I12	109	2
	L7	152	4
COIL ASSY., CHARGE	J2	115	7
			8
	J5	118	5
	J6	119	6
			7
COIL ASSY., IGNITION	J1	114	1
	J5	118	1
	J6	119	1
COIL ASSY., LAMP	J2	115	4
	J6	119	3
COLLAR B, AIR CLEANER	H6	87	8
	H9	90	8
	H12	93	7
COLLAR, 10X16X53	K15	144	2
COLLAR, AIR CLEANER	H6	87	7
	H9	90	7
	H12	93	6
	L14	159	10
COLLAR, AIR CLEANER CASE	M1	162	1
COLLAR, LEVER	H3	84	37
COLLAR, SETTING	G8	73	12
	G16	81	12
COLLAR, STOPPER	J14	127	19
COLLAR, TANK CUSHION	I12	109	16
	L8	153	19
CONTACTOR ASSY.	J7	120	1
CONTROL ASSY.	J12	125	6
			7
			8
CONTROL ASSY.	J12	125	9
	J15	128	31
CORD, EARTH	E8	41	17
CORD, STOP SWITCH	J2	115	9
	J3	116	9
	J5	118	6
COUNTERSHAFT COMP.	K8	137	4
	K9	138	4
COUPLER COMP.	K15	144	8
COVER ASSY., CRANKCASE	E9	42	1
	E15	48	1
COVER ASSY., GEAR CASE	K8	137	1
	K9	138	1
COVER COMP., AIR CLEANER	H9	90	5
	H10	91	5
	L3	148	6
COVER COMP., FAN	G3	68	2
	G4	69	2
COVER COMP., HEAD	E1	34	6
COVER COMP., MUFFLER	M1	162	2
COVER COMP., RR. MUFFLER	M1	162	3
COVER, AIR CLEANER	H6	87	4
	L14	159	8
COVER, AIR CLEANER CASE	H12	93	3
COVER, CYLINDER HEAD	E1	34	6
CRANKSHAFT COMP.	E16	49	1
			2
			3
			4
			5
	F1	50	5
			6
			7
CUP, FUEL STRAINER	G11	76	28
	I12	109	6
	L7	152	8
[D]			
DEFLECTOR COMP., MUFFLER	H15	96	10
	I1	98	10
DIAPHRAGM ASSY.	H2	83	27
DOWEL PIN, 12X20	E2	35	14
DOWEL PIN, 8X12	E12	45	14
	E15	48	12
DOWEL PIN, 8X14	K8	137	9
	K9	138	9
[E]			
ELBOW COMP., AIR CLEANER	H7	88	9
	H9	90	9
	H12	93	8
ELEMENT, AIR CLEANER	H5	86	2
	H9	90	2
	H10	91	1
	H12	93	1
	L3	148	2
	L14	159	2
EMBLEM	K11	140	2
	K12	141	2
	L10	155	14
E-RING, 2MM	H3	84	43
E-RING, 4MM	H3	84	44
	L2	147	16
E-RING, 7MM	H3	84	45
	L2	147	17
[F]			
FAN, COOLING	I14	111	1
FILTER COMP., FUEL	L7	152	13
FILTER, CUP	G13	78	40
	I12	109	5
	L7	152	7
FILTER, DRAIN TUBE	H11	92	9
	L3	148	10
FILTER, FUEL	I7	104	9
			10
	I11	108	29
	I12	109	11
FILTER, OUTER	H5	86	3
	H9	90	3
	H12	93	2
FLANGE COMP., BAFFLE	I1	98	7
	I3	100	7
FLOAT SET	G6	71	3
	G14	79	3
FLYWHEEL COMP.	I15	112	5
			6
			7
			8
			9
FUSE, BLADE	K4	133	25
	K7	136	24
	K16	145	43
	L1	146	43
[G]			
GASKET KIT	L16	161	1
GASKET SET	G5	70	1
	G14	79	1
GASKET, CYLINDER HEAD	E1	34	5
GASKET, EX. PIPE	H14	95	6
	H16	97	18
	I1	98	6
	I2	99	5
			6
			14
	I3	100	6
	L5	150	7
			8
			9
	L13	158	3
GASKET, MUFFLER	H14	95	8
	H15	96	8
			9

PART NAME INDEX

Part name	Address	Page	Ref.
GASKET, MUFFLER	I1	98	9
	I3	100	9
			10
	L5	150	13
GAUGE ASSY., FUEL	I4	101	5
GEAR, DRIVE PINION	J8	121	7
GEAR, PRIMARY DRIVE	K8	137	3
	K9	138	3
GEAR, REDUCTION	J9	122	11
GOVERNOR ASSY.	E10	43	8
	E15	48	6
GRIP, REINFORCEMENT	G2	67	14
GRIP, STARTER	F16	65	9
	G2	67	13
	L15	160	9
GROMMET, AIR CLEANER	H6	87	5
	H9	90	6
	H11	92	13
	H12	93	4
	L4	149	14
GROMMET, CHOKE ROD	H2	83	29
	L2	147	10
GROMMET, CORD	J2	115	6
	J5	118	4
	J6	119	5
GROMMET, DRAIN HOLE	G4	69	8
GROMMET, FENDER	H2	83	33
GUIDE, CHOKE ROD	H2	83	30
	L2	147	11
GUIDE, EX. VALVE	E1	34	3
GUIDE, IN. VALVE	E1	34	2
GUIDE, PRE AIR CLEANER	H9	90	12
GUIDE, PUSH ROD	F12	61	15
			19
[H]			
HANDLE, BOX WRENCH	K14	143	3
HARNESS ASSY., ENGINE WIRE	J6	119	8
HARNESS ASSY., SUB WIRE	K6	135	7
			8
	K15	144	6
HARNESS, SUB WIRE	K2	131	7
	K6	135	9
HEAD COMP., CYLINDER	E1	34	1
HOLDER, BRUSH	J9	122	12
HOLDER, CABLE	G10	75	19
	J13	126	13
HOLDER, FUEL FILTER	I7	104	11
HOLDER, GOVERNOR WEIGHT	E11	44	10
	E15	48	8
HOLDER, LENS	K16	145	25
HOLDER, STOP SWITCH CORD	J3	116	10
	J5	118	7
	J6	119	9
	K16	145	15
HOLDER, WIRE	G10	75	21
	J14	127	18
[I]			
INSULATOR	J9	122	14
INSULATOR, CARBURETOR	G8	73	14
			15
	G16	81	14
			15
[J]			
JET SET, PILOT, #38	G13	78	37
JET SET, PILOT, #40	G13	78	37
JET SET, PILOT, #45	G13	78	37
	H4	85	52
JET, MAIN, #100	G12	77	36
	H4	85	51
JET, MAIN, #102	G13	78	36
	H4	85	51
JET, MAIN, #105	G13	78	36
	H4	85	51
JET, MAIN, #108	H4	85	51
JET, MAIN, #110	G13	78	36
JET, MAIN, #112	G13	78	36
JET, MAIN, #115	G13	78	36
JET, MAIN, #88	G12	77	36
JET, MAIN, #90	G12	77	36
JET, MAIN, #92	G12	77	36
JET, MAIN, #95	G12	77	36
	G13	78	36
JET, MAIN, #98	G12	77	36
	G13	78	36
	H4	85	51
JOINT, FUEL TANK	I4	101	3
JOINT, ROD	H1	82	22
	L2	147	4
[K]			
KEY COMP.	K3	132	11
	K6	135	13
	K16	145	13
KEY, 6.3X6.3X43	F2	51	12
	K9	138	6
KEY, 7X7X33	F2	51	12
	K8	137	6
KEY, SPECIAL WOODRUFF, 25X18	I16	113	11
KNOB, COCK LEVER	K15	144	10
[L]			
LABEL, AIR CLEANER CAUTION	K12	141	4
	L10	155	7
LENS	K16	145	22
LENS ASSY., PROTECTOR	K3	132	13
	K16	145	21
LEVER COMP., CHOKE	G10	75	22
LEVER COMP., THROTTLE	J16	129	2
LEVER, CHOKE	H1	82	21
	L2	147	3
LEVER, COCK	G10	75	24
LEVER, CONTROL	J12	125	10
LIFTER, VALVE	F12	61	5
[M]			
MARK, AIR CLEANER	L10	155	6
MARK, AIR CLEANER SALES POINT	K12	141	5
MARK, CAUTION	L9	154	2
MARK, CHOKE	K12	141	8
	L9	154	3
	L10	155	13
MARK, CONTROL BOX	K3	132	14
	K6	135	14
	L9	154	4
MARK, EX. CAUTION	K13	142	10
	L10	155	8
	L11	156	17
	L12	157	18
MARK, FUEL INDICATION	K12	141	6
MARK, OIL CAUTION	K12	141	7
	L10	155	12
MARK, OPERATOR CAUTION	K10	139	1
	K11	140	1
	K12	141	9
	K13	142	9
	L9	154	1
	L10	155	15
	L11	156	16
MARK, THROTTLE INDICATION	K12	141	3
	L10	155	5
METER ASSY., FUEL	I12	109	7
	L7	152	9
MOTOR UNIT, STARTER	J7	120	4
	J8	121	4
MUFFLER COMP.	H13	94	1
	I1	98	1
	I3	100	2
	L5	150	1
			2
	L13	158	1
[N]			
NETTING, WIRE FLANGE	L6	151	20
NOSE, SILENCER	H6	87	6
	H8	89	14
	H12	93	5
NOZZLE, MAIN	G8	73	11
	G16	81	11
NUT-WASHER, 6MM	J10	123	19
NUT, AIR CLEANER COVER	H12	93	11
NUT, FLANGE, 10MM	E8	41	12
NUT, FLANGE, 5MM	H11	92	10
	L3	148	11
NUT, FLANGE, 6MM	H3	84	41
	H8	89	13
	H9	90	16
	H11	92	11

PART NAME INDEX

Part name	Address	Page	Ref.
NUT, FLANGE, 6MM	H12	93	13
	J15	128	30
	L3	148	12
NUT, FLANGE, 8MM	H16	97	17
	I1	98	15
	I2	99	7
	I3	100	15
	I8	105	16
	L6	151	17
	L13	158	5
NUT, HEX., 4MM	K4	133	22
	K6	135	21
NUT, HEX., 5MM	M2	163	10
NUT, PIVOT ADJUSTING	F12	61	17
NUT, SELF-LOCK, 6MM	J14	127	23
NUT, SPECIAL, 16MM	I15	112	10
	I16	113	10
NUT, TANK MOUNTING	I10	107	23
NUT, TOOL BOX SETTING	H8	89	12
	H9	90	15
	H12	93	12
NUT, WING, 6MM	H7	88	11
[O]			
OIL SEAL, 30X46X8	K8	137	8
	K9	138	8
OIL SEAL, 35X52X8	E7	40	9
	E13	46	15
OIL SEAL, 8X14X5	E7	40	10
O-RING, 14MM	E7	40	11
	I8	105	14
O-RING, 9.0X1.3	I12	109	4
	L7	152	6
[P]			
PACKING	J10	123	17
PACKING, AIR CLEANER	H2	83	26
	H4	85	54
	L2	147	8
PACKING, AIR CLEANER COVER	H9	90	4
PACKING, AIR CLEANER ELBOW	H12	93	9
PACKING, CARBURETOR	G9	74	17
	G16	81	16
PACKING, CARBURETOR INSULATOR	G13	78	39
	H4	85	53
PACKING, CASE COVER	E9	42	2
	E10	43	2
	E15	48	2
PACKING, CHAIN CASE COVER	K8	137	2
	K9	138	2
PACKING, ELBOW	H5	86	1
	H9	90	1
PACKING, FUEL COCK	G11	76	27
PACKING, FUEL FILLER CAP	I6	103	8
	I7	104	8
	I12	109	10
	L7	152	12
PACKING, FUEL STRAINER CUP	G8	73	13
	I12	109	1
	L7	152	1
PACKING, HEAD COVER	E2	35	8
PACKING, INSULATOR	G10	75	18
	G16	81	17
PACKING, OIL FILLER CAP	E10	43	7
	E15	48	5
PANEL COMP., CONTROL	K2	131	4
	K6	135	5
PIN, GOVERNOR WEIGHT	E12	45	11
	E15	48	9
PIN, LOCK, 10MM	E8	41	14
PIN, PISTON	F10	59	3
PIN, SPRING, 2X12	G12	77	33
PIPE COMP., EX.	L13	158	2
PIPE, EX.	H14	95	4
	I1	98	4
	I2	99	4
	I3	100	4
PISTON	F7	56	2
	F8	57	2
	F9	58	2
	F10	59	2
PIVOT, ROCKER ARM	F12	61	6
PLATE, COOLING FAN SETTING	I14	111	2
PLATE, FUEL INDICATION	L10	155	9
PLATE, LEVER SETTING	G10	75	25
PLATE, SET	M2	163	6
PLUG, CONE TYPE, 4X5	G12	77	35
PLUG, OIL DRAIN	K16	145	30
PLUG, SEALING	E7	40	8
PLUG, SPARK	E4	37	16
	L1	146	48
PROTECTOR COMP., EX. PIPE	I3	100	1
PROTECTOR COMP., FAN COVER	G4	69	3
PROTECTOR COMP., MUFFLER	H13	94	2
	I3	100	3
PROTECTOR, CIRCUIT	K3	132	12
	K16	145	20
PROTECTOR, EX. PIPE	H13	94	3
PROTECTOR, L. MUFFLER	I1	98	3
PROTECTOR, MUFFLER INNER	I2	99	2
	L5	150	4
PROTECTOR, MUFFLER OUTER	I2	99	1
	L5	150	3
PROTECTOR, R. MUFFLER	I1	98	2
PULLEY COMP., STARTER	I14	111	3
PULLEY, RECOIL STARTER	F14	63	3
	L15	160	3
PULLEY, STARTER	I14	111	4
[R]			
RATCHET, STARTER	F14	63	4
	L15	160	4
RECTIFIER ASSY.	L1	146	44
RECTIFIER ASSY., REGULATOR	K5	134	1
	K6	135	6
RECTIFIER ASSY., REGULATOR	K15	144	4
RECTIFIER ASSY., SILICON	K2	131	5
	K15	144	5
RETAINER, EX. VALVE SPRING	F12	61	12
RETAINER, IN. VALVE SPRING	F12	61	11
			12
RETAINER, SPRING	F16	65	8
	L15	160	8
RING SET, PISTON	F3	52	1
	F4	53	1
	F5	54	1
	F6	55	1
	F7	56	1
ROD ASSY., CONNECTING	F10	59	4
ROD COMP., PUSH	F12	61	18
ROD, CHOKE	H1	82	23
	L2	147	5
ROD, CHOKE CONTROL	H2	83	28
	L2	147	9
ROD, GOVERNOR	J11	124	3
ROD, PUSH	F11	60	3
ROPE, RECOIL STARTER	F16	65	10
	L15	160	10
ROTATOR, VALVE	F12	61	14
RUBBER A, TANK MOUNTING	I10	107	22
RUBBER COMP., TANK MOUNTING	I10	107	24
RUBBER, BOTTOM	L1	146	45
			46
RUBBER, FUEL	I7	104	13
	I12	109	15
	L8	153	18
	L14	159	13
RUBBER, SUPPORTER	I4	101	1
	L7	152	2
RUBBER, TANK CUSHION	I12	109	14
	L8	153	17
RUBBER, TANK MOUNTING	I12	109	12
	L7	152	15
[S]			
SCREEN SET, FUEL STRAINER	I12	109	3
	L7	152	5
SCREW-WASHER, 4X6	J10	123	16
SCREW-WASHER, 5X12	H3	84	40
	M2	163	11
SCREW-WASHER, 5X16	G12	77	32
SCREW-WASHER, 5X32	J10	123	18
SCREW-WASHER, 6X20	M2	163	12
SCREW SET	G6	71	7
	G14	79	5
	G15	80	7
SCREW SET, DRAIN	G6	71	6
	G14	79	6
	G15	80	6
SCREW SET, PILOT	G6	71	5
	G13	78	38
SCREW, CENTER	G1	66	11
	L15	160	11

PART NAME INDEX

Part name	Address	Page	Ref.
SCREW, FLAT, 5X10	I8	105	15
	I12	109	17
	L8	153	20
SCREW, GLOVE BOX	K16	145	29
SCREW, PAN, 3X12	K4	133	20
	K16	145	36
SCREW, PAN, 3X6	G12	77	30
SCREW, PAN, 4X12	K4	133	21
	K6	135	20
SCREW, PAN, 4X6	G12	77	31
	J14	127	25
SCREW, PAN, 5X12	H3	84	39
SCREW, PAN, 5X16	J15	128	26
SCREW, PAN, 5X16.5	H9	90	14
SCREW, PAN, 5X32	J15	128	27
SCREW, PAN, 5X35	J15	128	28
SCREW, PAN, 5X45	J15	128	29
SCREW, PAN, 5X8	J16	129	5
SCREW, RECESSED, 5X25	J14	127	22
SCREW, SPECIAL, 6X12	K4	133	16
	K6	135	16
SCREW, TAPPING, 3X6	G4	69	13
SCREW, TAPPING, 4X6	H16	97	14
			15
			16
	I1	98	13
			14
	I3	100	14
	L6	151	15
			16
SCREW, TAPPING, 4X8	I2	99	13
	L5	150	14
SCREW, TAPPING, 5X25	M2	163	9
SCREW, TAPPING, 5X8	H16	97	13
			14
			16
	I1	98	11
			12
			14
	I3	100	13
	K16	145	28
	L6	151	15
	M2	163	8
SCREW, TAPPING, 6X10	H15	96	11
	I3	100	11
SCREW, THROTTLE STOP	G8	73	10
	G16	81	9
SEAL, AIR CLEANER	H10	91	8
	L3	148	9
SEAL, AIR CLEANER CASE	L14	159	7
SEAL, AIR CLEANER COVER	L14	159	9
SEAL, CHOKE LEVER	H2	83	35
	L2	147	14
SEAL, MUFFLER PROTECTOR	I2	99	3
	L5	150	5
SEAL, VALVE STEM	F11	60	1
SEAT, VALVE SPRING	F12	61	13
SEPARATOR, AIR CLEANER	H10	91	2
	L3	148	3

Part name	Address	Page	Ref.
SHAFT, GOVERNOR ARM	E6	39	3
SHAFT, P.T.O.	K8	137	5
	K9	138	5
SHROUD	G4	69	4
SLIDER, GOVERNOR	E12	45	12
	E15	48	10
SOLENOID ASSY.	J16	129	3
SPACER COMP., CARBURETOR	G9	74	16
	H4	85	55
SPACER, CONTROL LEVER	J14	127	14
SPACER, MUFFLER COVER	M2	163	7
SPRING, AIR CLEANER CASE LID	L14	159	5
SPRING, BRUSH RETURN	J8	121	10
SPRING, CABLE RETURN	J14	127	17
SPRING, CHOKE RETURN	J16	129	1
SPRING, COCK LEVER	G10	75	26
SPRING, COIL	K16	145	24
SPRING, CONTROL ADJUSTING	J14	127	16
SPRING, FRICTION	F15	64	5
	L15	160	5
SPRING, GOVERNOR	J11	124	4
	J12	125	4
SPRING, LEVER	J13	126	11
SPRING, MANUAL CHOKE	H2	83	25
	L2	147	7
SPRING, RATCHET	F16	65	7
	L15	160	7
SPRING, RETURN	G10	75	23
SPRING, STARTER RETURN	F15	64	6
	L15	160	6
SPRING, THROTTLE RETURN	J12	125	5
SPRING, VALVE	F12	61	10
SPRING, WEIGHT RETURN	F12	61	7
STARTER ASSY., RECOIL	F13	62	1
	L15	160	1
STAY ASSY., CHOKE CONTROL	G10	75	20
STAY ASSY., MANUAL CHOKE	G16	81	19
	H1	82	19
	L2	147	1
STAY A, MUFFLER	L5	150	10
STAY COMP., SOLENOID	H1	82	20
	L2	147	2
STAY, AIR CLEANER	H10	91	4
	L3	148	5
	L14	159	4
STAY, MUFFLER COVER	M2	163	5
STOPPER, CHOKE ROD	H2	83	24
	L2	147	6
STOPPER, DISCHARGE GUARD	L1	146	47
STRAINER COMP., FUEL	I4	101	2
	L7	152	3
STRAP, CABLE, 118MM	K4	133	18
	K6	135	18
SUB HARNESS	G4	69	5
	K15	144	9
SUSPENSION, COUPLER	K2	131	6
	K15	144	7
SWITCH ASSY., COMBINATION	K2	131	10
	K3	132	10

Part name	Address	Page	Ref.
SWITCH ASSY., COMBINATION	K6	135	12
	K15	144	11
			12
	K16	145	12
SWITCH ASSY., ENGINE KILL	K16	145	17
SWITCH ASSY., ENGINE STOP	G4	69	6
			7
			12
	K16	145	14
SWITCH ASSY., OIL LEVEL	E6	39	2
SWITCH, THERMO	K15	144	1
[T]			
TANK ASSY., FUEL	I4	101	4
TANK COMP., FUEL	I5	102	6
	I6	103	6
	I12	109	8
	L7	152	10
TUBE, 11X105	E2	35	7
TUBE, 3.5X130	H4	85	50
TUBE, 3.5X75	H4	85	49
TUBE, AIR VENT	G16	81	13
TUBE, BREATHER	E2	35	7
	L3	148	1
	L14	159	1
TUBE, CORD	K16	145	34
TUBE, FASTENER, 30MM	K4	133	19
	K6	135	19
TUBE, FUEL, 3.5X25	G12	77	34
TUBE, FUEL, 4.5X150	I12	109	18
	I13	110	18
	L8	153	21
TUBE, FUEL, 4.5X165	I8	105	17
	I12	109	18
	I13	110	18
	L8	153	21
TUBE, FUEL, 4.5X180	I8	105	17
TUBE, FUEL, 4.5X190	L8	153	21
TUBE, FUEL, 4.5X235	I8	105	18
	I9	106	18
	L8	153	21
TUBE, FUEL, 4.5X250	I8	105	17
TUBE, FUEL, 4.5X260	L8	153	21
TUBE, FUEL, 4.5X300	H4	85	46
	I8	105	17
TUBE, FUEL, 4.5X400	I8	105	17
TUBE, FUEL, 4.5X430	I8	105	18
	I9	106	18
TUBE, FUEL, 4.5X580	I8	105	18
TUBE, FUEL, 4.5X700	L8	153	21
TUBE, FUEL, 6.3X50	I7	104	12
	L7	152	14
TUBE, FUEL, 6.5X50	I7	104	12
	L7	152	14
[V]			
VALVE ASSY., SOLENOID	G16	81	18

PART NAME INDEX

Part name	Address	Page	Ref.
VALVE ASSY., SOLENOID	K16	145	18
VALVE SET, FLOAT	G5	70	2
	G14	79	2
VALVE, DASHPOT CHECK	H2	83	31
VALVE, EX.	F12	61	9
VALVE, IN.	F12	61	8
[W]			
WASHER COMP., HEAD COVER	E2	35	13
WASHER, 10.5X40X4	K16	145	31
WASHER, 8MM	F1	50	10
WASHER, 8.2X17X0.8	E7	40	7
WASHER, CHOKE LEVER	H2	83	34
	L2	147	13
WASHER, CONTROL LEVER	J13	126	12
WASHER, DRAIN PLUG, 12MM	E8	41	13
	K16	145	37
WASHER, LOCK, 8MM	F1	50	11
WASHER, PLAIN, 4MM	K4	133	23
	K7	136	22
WASHER, PLAIN, 5MM	H3	84	42
	L2	147	15
	M2	163	13
WASHER, PLAIN, 6MM	E13	46	16
	E15	48	14
WASHER, PLAIN, 8MM	I2	99	8
WASHER, SPRING, 4MM	K4	133	24
	K7	136	23
WASHER, SPRING, 5MM	M3	164	14
WASHER, TANK CUSHION	I12	109	13
	L7	152	16
WASHER, THRUST, 16.1MM	F12	61	20
WASHER, THRUST, 2.7X8	H2	83	36
WEIGHT, BALANCER	F1	50	8
WEIGHT, GOVERNOR	E11	44	9
	E15	48	7
WIRE, WATER COVER	J9	122	13
WRENCH COMP., SPARK PLUG	K14	143	2
	L10	155	11
WRENCH, PLUG	K14	143	1
	L10	155	10
[Y]			
YOKE COMP.	J8	121	9

1 FOREWORD INDEX

2 ENGINE GROUP

3 PART NUMBER INDEX

4 PART NAME INDEX

HONDA

The Power of Dreams

E.2010.10