DESCRIPTION:	WIRING CODE:	REVISION:	PART NUMBER:
AMMK 5,7.5,10 & 15 KW ELECTRIC HEAT	208/230V 60 HZ 1 PH		1082111-D

NOTE: THE NUMBER OF ELEMENTS, SEQUENCERS, CIRCUIT BREAKERS WILL VARY DEPENDING ON THE AMOUNT OF ELECTRIC HEAT (KW)

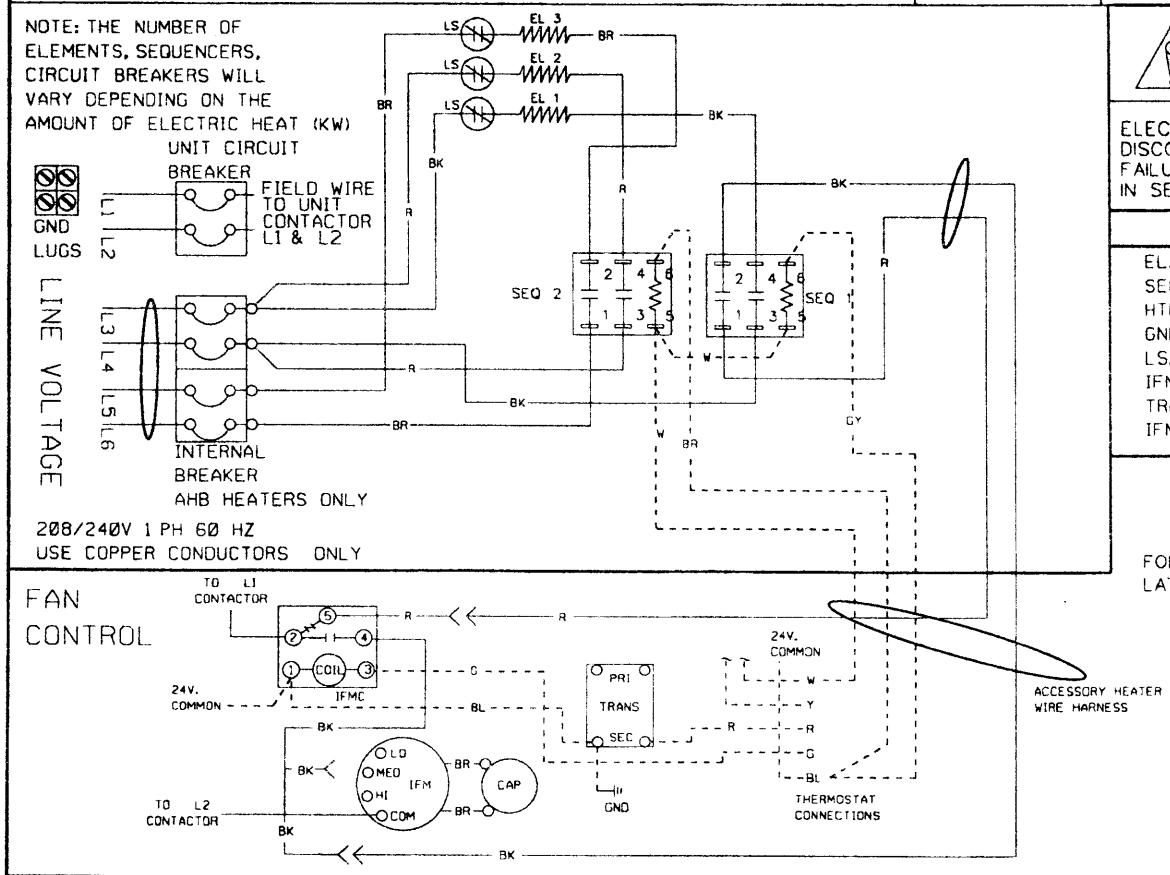

208/240V 1 PH 60 HZ
USE COPPER CONDUCTORS ONLY

WARNING

ELECTRICAL SHOCK HAZARD. DISCONNECT ALL POWER SUPPLIES. FAILURE TO DO SO COULD RESULT IN SERIOUS INJURY OR DEATH.

LEGEND

EL.....ELECTRIC ELEMENT
SEQ.....SEQUENCER
HTR.....HEATER
GND.....GROUND
LS.....LIMIT SWITCH
IFM.....INDOOR FAN MOTOR
TRANS....TRANSFORMER
IFMC.....INDOOR FAN MOTOR CONTROL

FOLLOW HEATER INSTALLATION INSTRUCTIONS.

WIRING
- - - - - LOW VOLTAGE
——— LINE VOLTAGE

HEATER ASSY. MODEL NUMBER	ELEMENTS	L3-L4	L5-L6	RECOMMENDED FOR USE WITH: PA55, PA95 & PH55
AMMK05AHB	1	30A BREAKER	----	24,30,36,42,48 & 60
AMMK05AHA	1	PIGTAIL	----	
AMMK07AHB	1,2	45A BREAKER	----	24,30,36,42,48 & 60
AMMK07AHA	1,2	PIGTAIL	----	
AMMK10AHB	1,2	60A BREAKER	----	24,30,36,42,48 & 60
AMMK10AHA	1,2	PIGTAIL	----	
AMMK15AHB	1,2,3	60A BREAKER	30A BREAKER	30,36,42,48 & 60

COLOR CODE	
BLACK	BK
BLUE	BL
BROWN	BR
GRAY	GY
ORANGE	O
RED	R
VIOLET	V
WHITE	W
YELLOW	Y

-NOTES-

1. ALL WIRING MUST BE DONE IN ACCORDANCE WITH NATIONAL AND LOCAL ELECTRICAL CODES.
2. WIRING THAT IS CIRCLED MUST BE DONE BY INSTALLER
3. IF ANY WIRE MUST BE REPLACED, IT MUST BE REPLACED WITH ITS EQUIVALENT. MIN. RATING 105 C