3012 AND 3118 S/N 0100101 thru 0199999
3016 S/N 0300101 thru 0399999

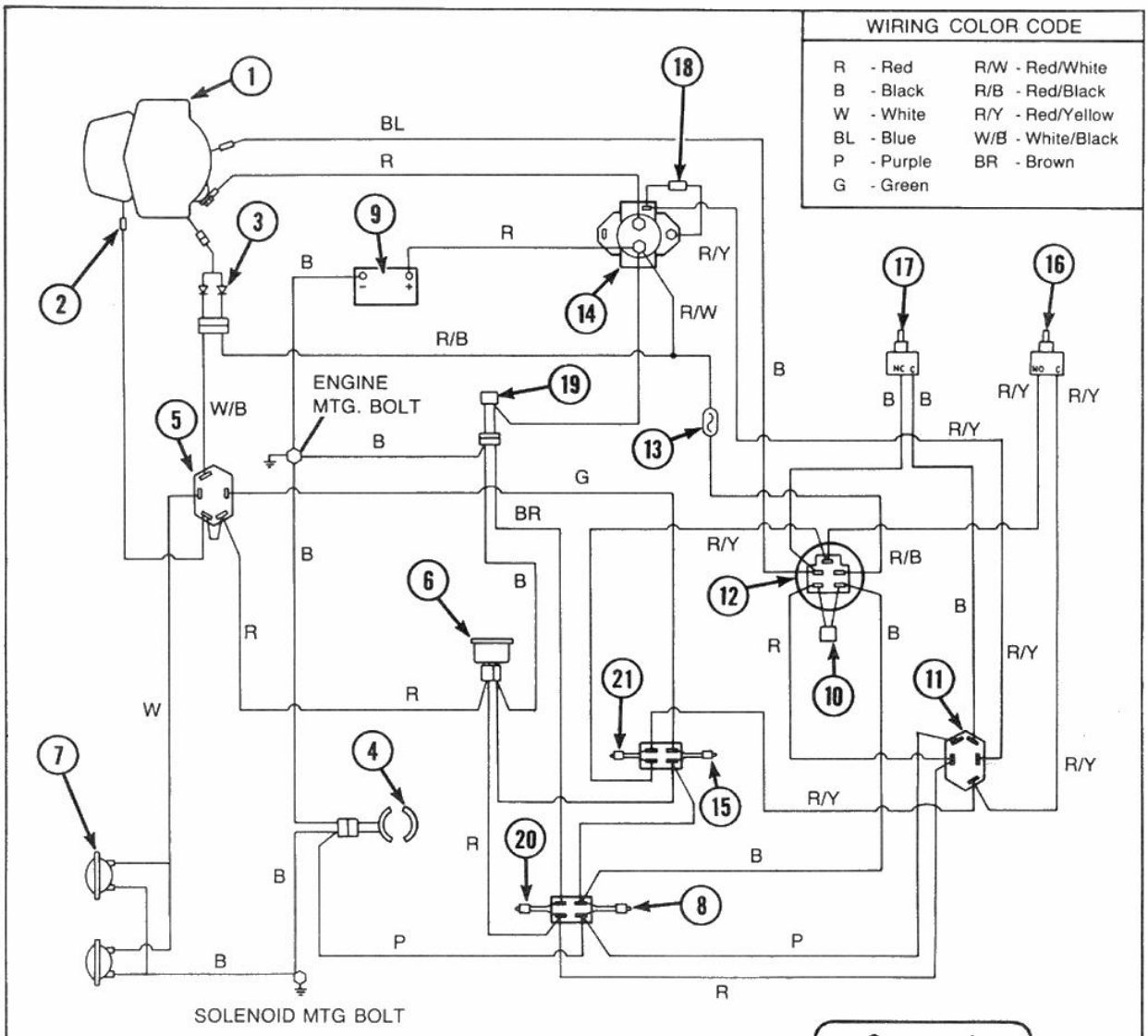
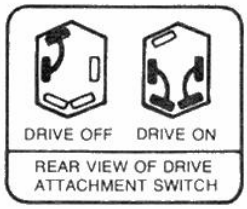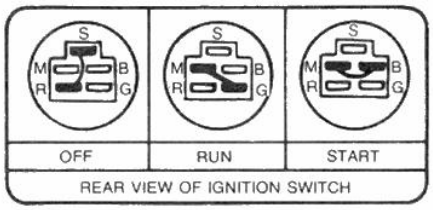
1. B&S ENGINE
2. FUEL SOLENOID
3. DIODE
4. ELECTRIC CLUTCH
5. LIGHT SWITCH
6. HOURMETER (16 & 18 HP)
7. HEADLIGHTS
8. ATTACHMENT DRIVE INDICATOR LIGHT
9. BATTERY
10. ELECTRIC LIFT PLUG
11. ATTACHMENT DRIVE SWITCH
12. IGNITION SWITCH
13. FUSE (30 AMP)
14. SOLENOID
15. HEADLIGHT INDICATOR (18 HP)
16. BRAKE INTERLOCK SWITCH
17. SEAT INTERLOCK SWITCH
18. CAPACITOR
19. VOLTAGE SENSOR (16 & 18 HP)
20. VOLTAGE LIGHT (16 & 18 HP)
21. BRAKE LIGHT (18 HP)