CONNECTION DIAGRAM

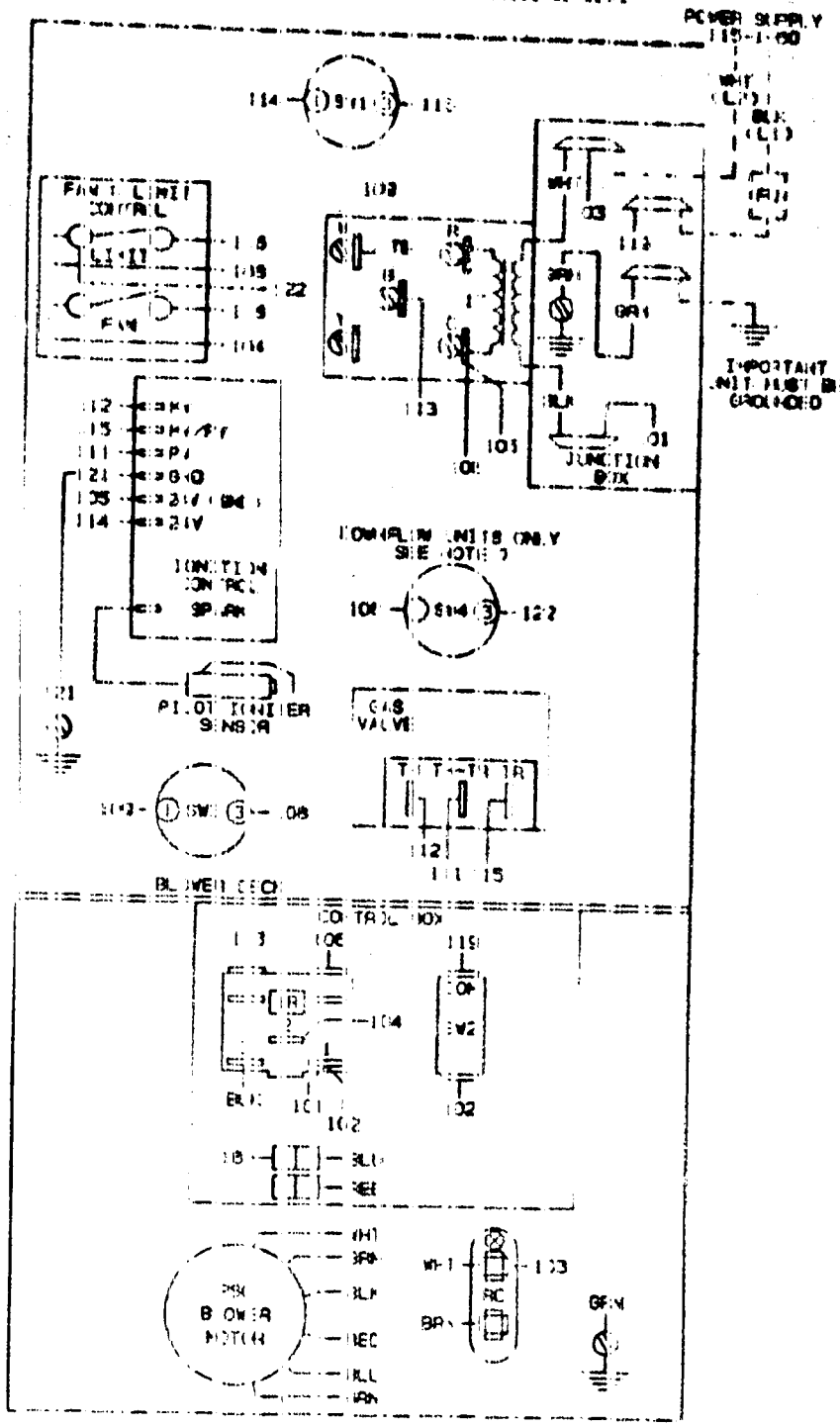

ELEMENTARY DIAGRAM

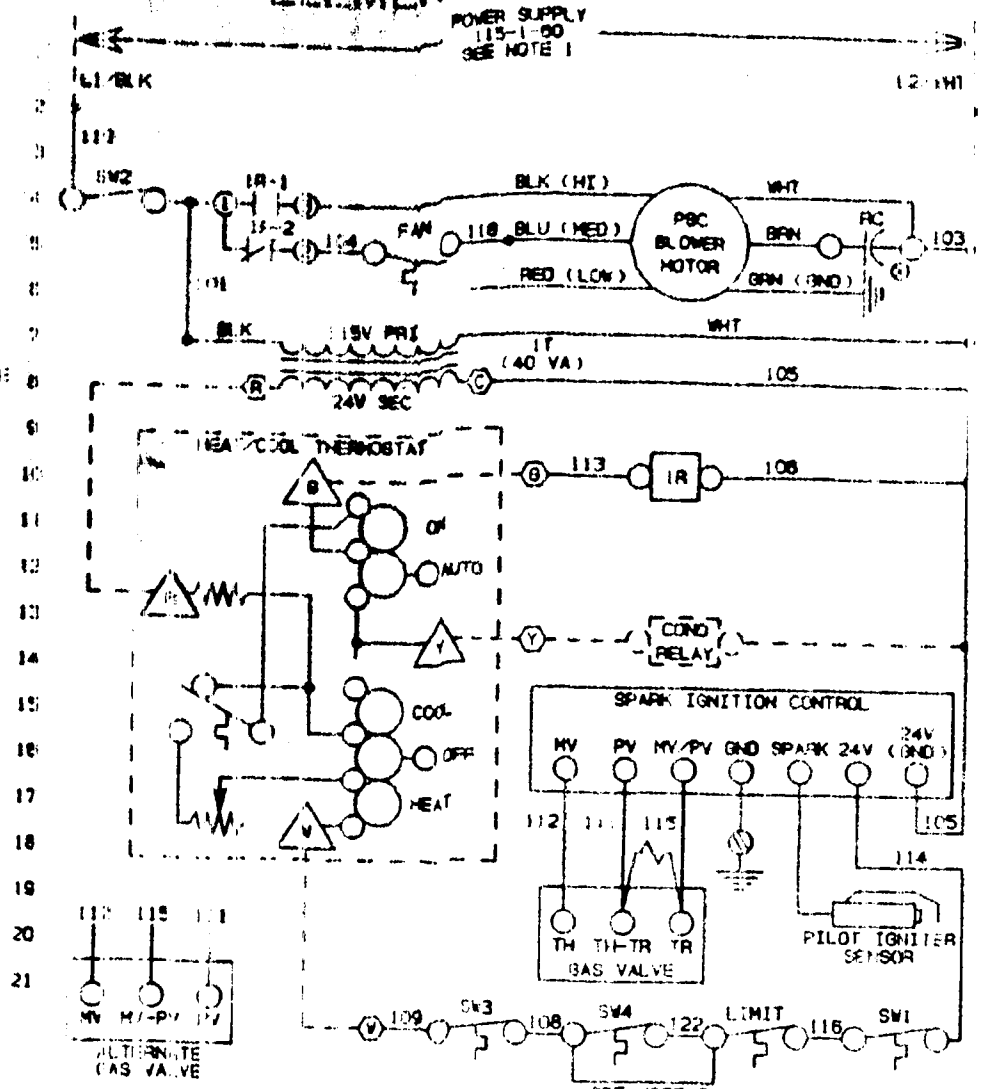

LEGEND

	TRANSFORMER, 24V
SW1	VENT SELECT SWITCH
SW2	SAFETY SWITCH
SW3	HOT LOUT SWITCH
SW4	BOX LIMIT SWITCH
RC	RUN CAPACITOR
	BLOWER MOTOR
TH-TR TR	PILOT VALVE
TH-TR	MAIN VALVE
	CONNECTOR, NUMBER
TB	TERMINAL BOARD 24V
	THERMOSTAT ROOM 24V CONT
	FIELD WIRING
	FIELD RECTIFICATION
	RUN CAPACITOR
	FACTORY WIRING

NOTES

1. ALL FIELD WIRING PER:
   (A) NATIONAL ELECTRIC CODE (NEC) AND/OR
   (B) CANADIAN ELECTRIC CODE (CEC) AND/OR
   (C) LOCAL OR CITY CODES
2. DRAFTING PRACTICES & SYMBOLS PER ARI GRAPHICAL STANDARDS
3. PROVIDE DISCONNECTS FOR ALL POWER SUPPLIES
4. USE COPPER CONDUCTORS ONLY FOR POWER SUPPLY CONNECTIONS
5. IF ANY OF THE ORIGINAL WIRE AS SUPPLIED WITH THE FURNACE MUST BE REPLACED IT MUST BE REPLACED WITH WIRING MATERIAL HAVING A TEMPERATURE RATING OF AT LEAST 105°C
6. MOTORS ARE INHERENTLY PROTECTED
7. FOR UPFLOW UNITS WIRE CODED 108 CONNECTS TO LIMIT SWITCH. FOR DOWNFLOW UNITS, WIRE CODED 122 CONNECTS TO LIMIT SWITCH